PHOTOFACT®

TRADE NAME:	Olson Model RA-590
SUPPLIER:	Olson Radio Corp. 260 S. Forge Street, Akron 8, Ohio
TYPE SET:	12 Tube Transceiver
POWER SUPPLY:	110 — 120 VAC, 60 Cycles (or) 12 Volt Storage Battery
RATING:	90 Watts, .75 Amp. @ 117 VAC (or) 7 Amp. @ 12.6VDC
TUNING RANGE:	All 23 CB Channels

OLSON MODEL RA-590

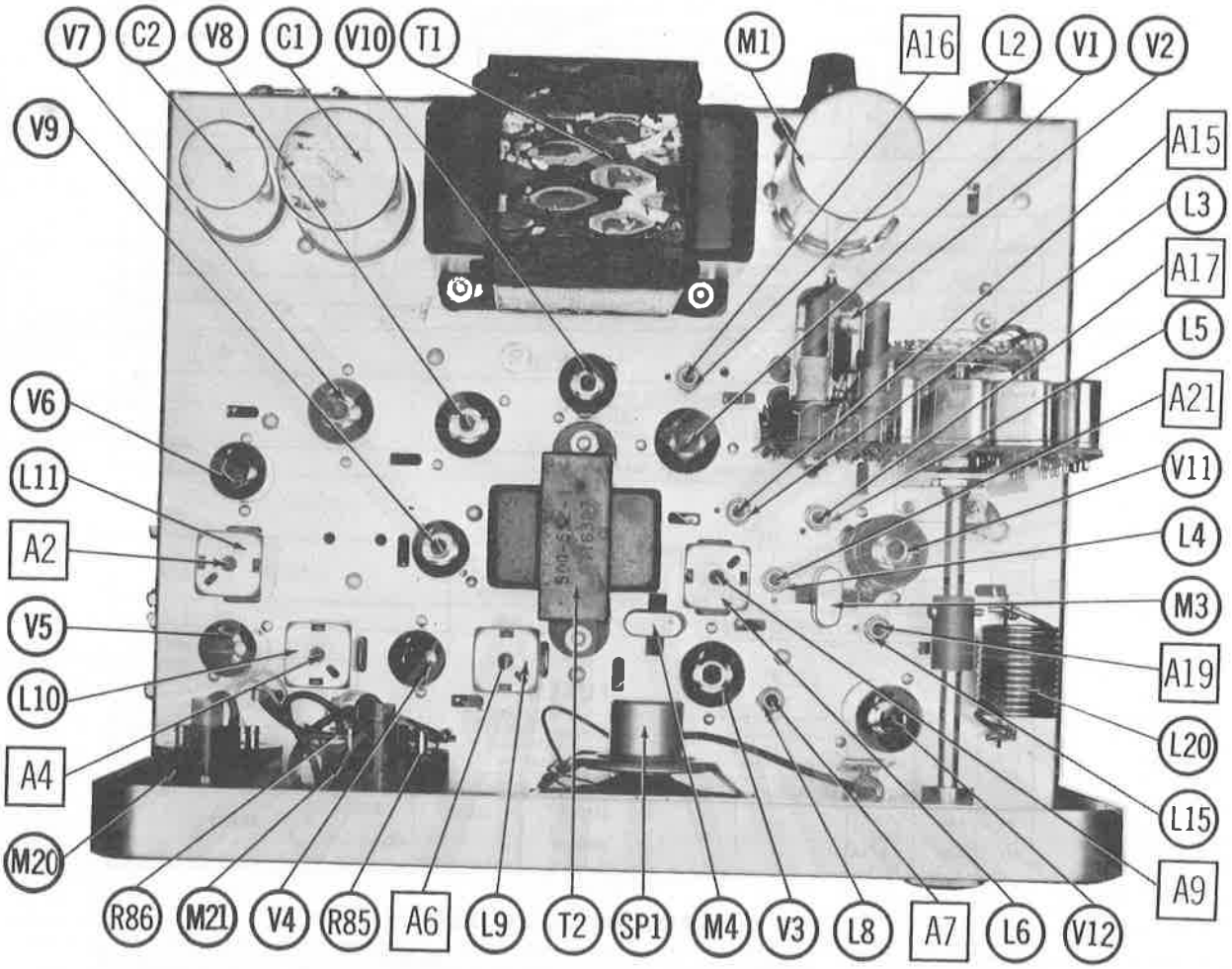

© 1964 Howard W. Sams & Co., Inc.
HOWARD W. SAMS & CO., INC. Indianapolis 6, Indiana
Printed in U. S. of America PY469

ALIGNMENT INSTRUCTIONS

Suggested Alignment Tools:

A1 thru A6.....GENERAL CEMENT #5097, 8727
WALSCO #2515

A7 thru A21..... GENERAL CEMENT #8282, 8606, 8606L
WALSCO #2526, 2543, 2544

A22, A23.....GENERAL CEMENT #8721, 8722
WALSCO #2519

RECEIVER ALIGNMENT

Connect DC VTVM between point Ⓐ and ground.

SIGNAL GENERATOR	CHANNEL	ADJUST	REMARKS
High side thru .001mfd to pin 2 (grid) of V3 (2nd Mixer), low side to ground. Tune to 260KC.	Any	A1 thru A6	Adjust for maximum.
High side to junction of M4 and C27. Tune to 7.502MC, 20UV.	"	A7	Set C33 (tune) to mid-range. Adjust A7 for maximum audio signal or meter deflection. Retune generator to 7MC. The image will be SLIGHTLY stronger if A7 is properly adjusted.
High side to pin 7 (grid) of V1 (1st Mixer). Tune to 7.5MC.	"	A8, A9	Adjust for maximum.
Use sweep generator. Connect across antenna receptacle. Tune to 27.1MC		A10, A11	Connect a low capacity RF voltmeter to the synthesizer output (junction of C14, C79). Connect a DC VTVM to the junction of C78, R72 (Cathode V2). Adjust A11 for maximum on VTVM. Adjust A10 clockwise for a maximum of 10 volts on RF voltmeter. Readjust A11 for maximum on VTVM and A10 for 10 volts on RF voltmeter. Check all channels. Remove meters.
Use sweep generator. High side to pin 8 (grid) of V2 (2nd Rec. Osc.) low side to ground. Tune to 19.61 MC, 400KC bandwidth.		A12, A13	Connect scope across synthesizer output (C79). Adjust for maximum symetrical bandpass. Remove scope.
Connect signal generator across antenna receptacle. Tune to channel frequency, 400~ Mod.	Center Channel Used.	A14, A15, A16	Adjust for maximum. Check high and low channels.

TRANSMITTER ALIGNMENT

Only those persons properly licensed are permitted to make repairs or adjustments which may result in illegal operation. (Refer to FCC rules and regulations Part 19, Subpart D, Section 19.71).

The frequency of the transmitter should be checked periodically with a secondary frequency standard to insure proper and legal operation.

Best results will be obtained when adjusting the final RF output circuit if the antenna normally used is connected and the chassis is as nearly in the cabinet as possible.

Connect dummy antenna.

SIGNAL GENERATOR	CHANNEL	ADJUST	REMARKS
Connect sweep generator to output of synthesizer (across C79). Tune to 27.1MC, 400KC bandpass.		A17, A18, A19, A20	Connect scope across R78 (grid of V12) with .5mfd in low side. Key transmitter. Adjust for bandpass of 26.95-27.26MC. Remove scope.
Connect DC VTVM across R78 (grid of V12).		A21	Key transmitter. Adjust for 20 volts MINIMUM on all channels.
Connect DC VTVM across R78 (grid of V12). Set meter switch to "C".		A22, A23	Key transmitter. Adjust A22 (Final) for MINIMUM reading on front panel meter. Adjust A23 (Loading) for 14-16MA. Repeat adjustments.
Connect RF voltmeter across antenna receptacle. Set meter switch to "S".		R6, C98	Short C94 (Final). Key transmitter. Adjust R6 for zero reading on front panel meter. Remove short from C94. Adjust C98 (RF Calibration) until meter reading indicates same voltage as RF voltmeter.

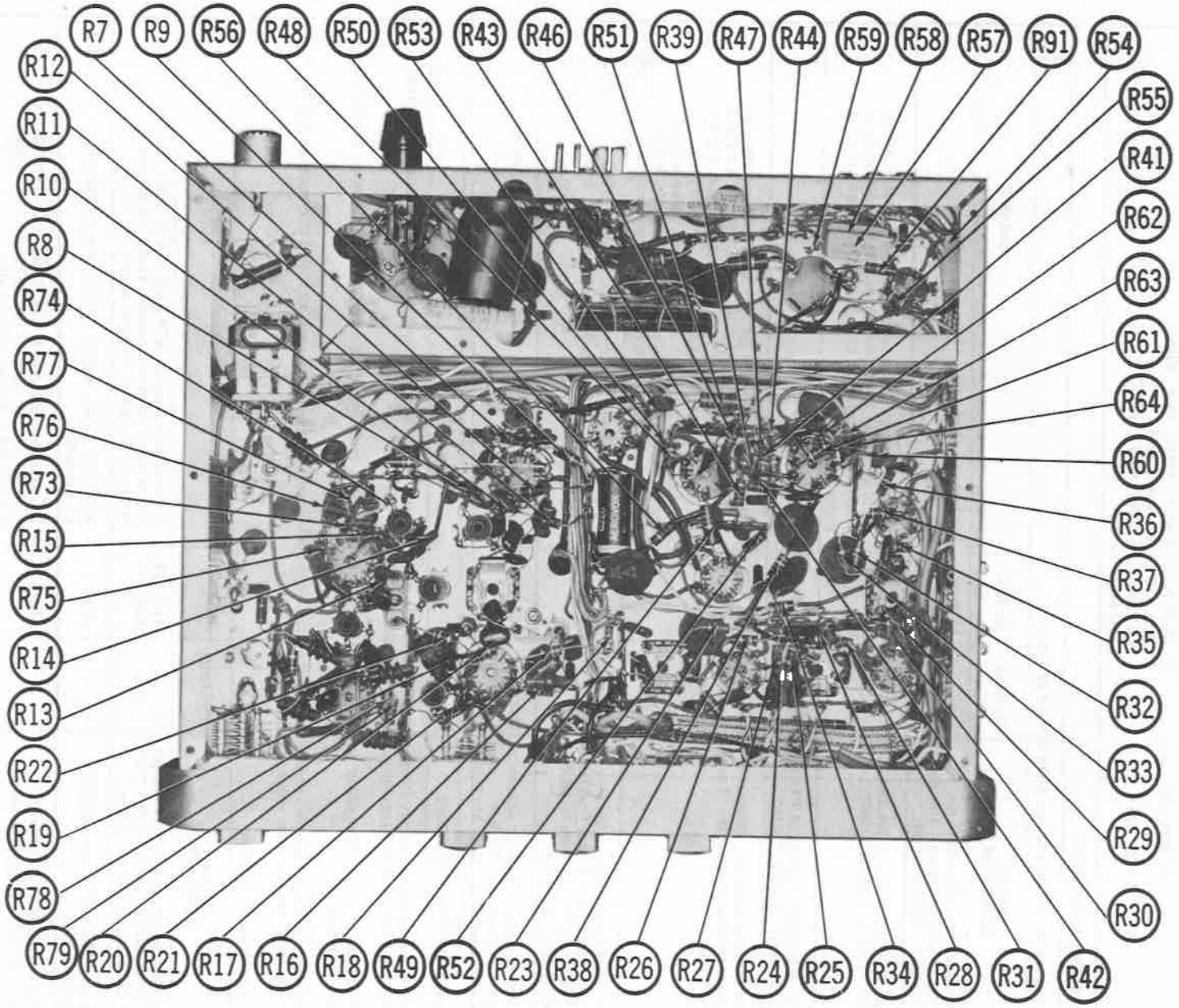
R7
R9
R56
R48
R50
R53
R43
R46
R51
R39
R47
R44
R59
R58
R57
R91
R54
R55
R41
R62
R63
R61
R64
R60
R36
R37
R35
R32
R33
R29
R30
R42
R31
R28
R34
R25
R24
R27
R26
R38
R23
R52
R49
R18
R16
R17
R21
R20
R79
R78
R19
R22
R13
R14
R75
R15
R73
R76
R77
R74
R8
R10
R11
R12

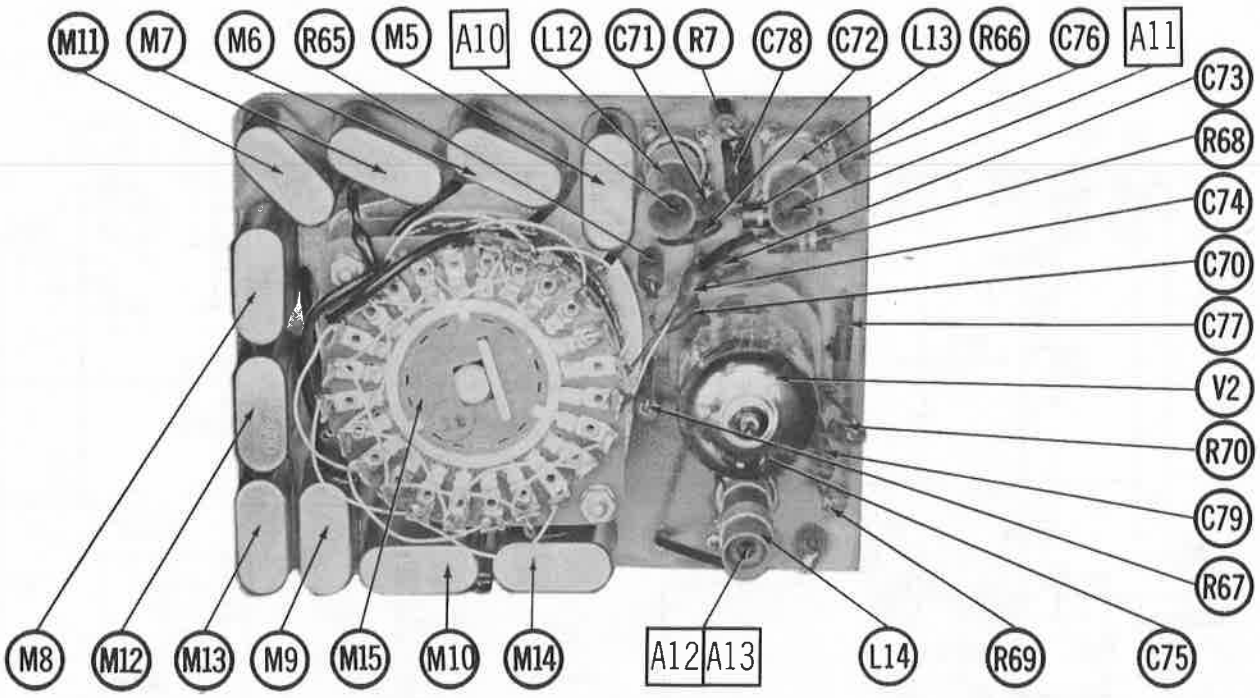
M11
M7
M6
R65
M5
A10
L12
C71
R7
C78
C72
L13
R66
C76
A11
C73
R68
C74
C70
C77
V2
R70
C79
R67
M8
M12
M13
M9
M15
M10
M14
A12
A13
L14
R69
C75

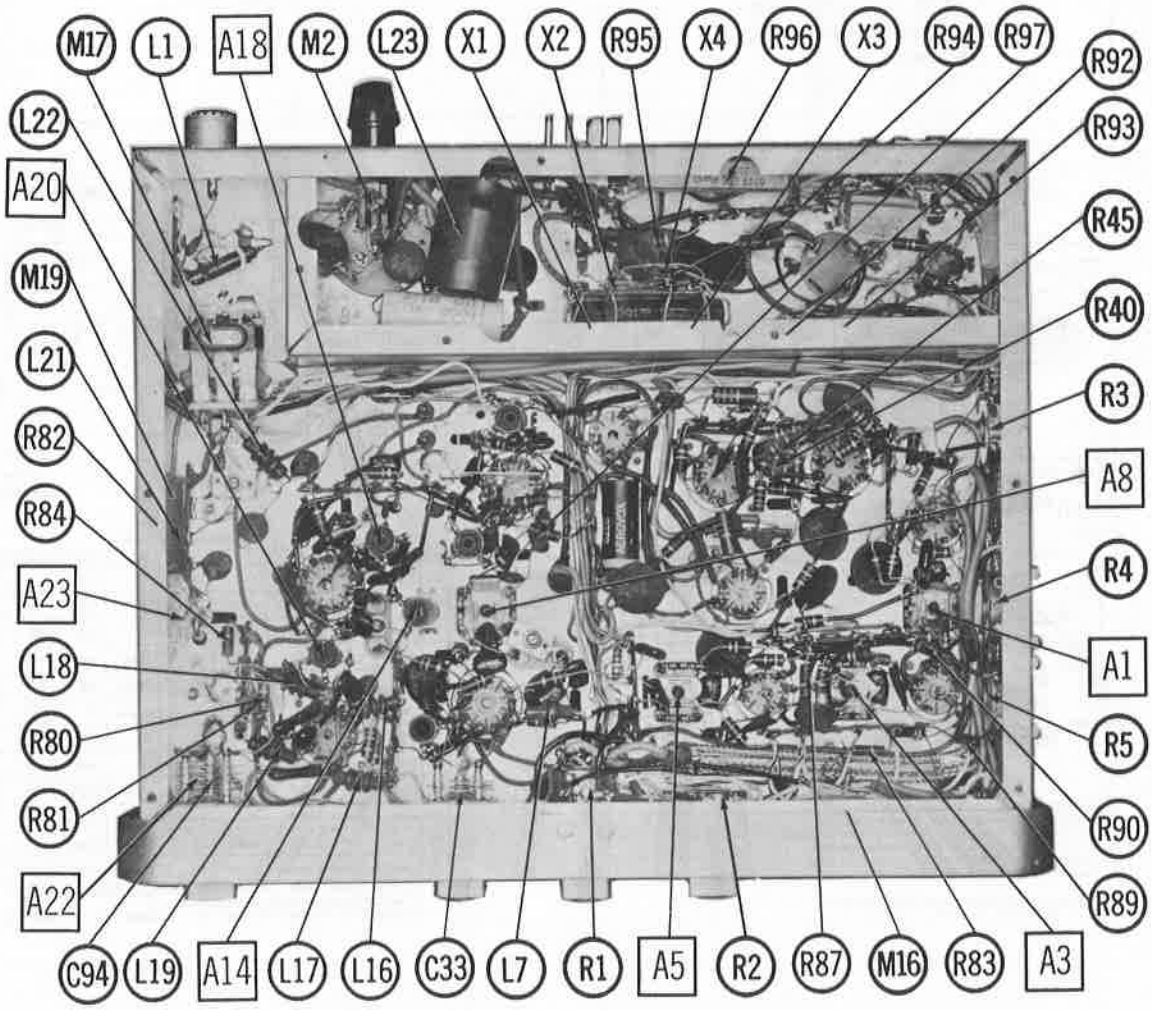
M17
L1
A18
M2
L23
X1
X2
R95
X4
R96
X3
R94
R97
R92
R93
R45
R40
R3
A8
R4
A1
R5
R90
R89
L22
A20
M19
L21
R82
R84
A23
L18
R80
R81
A22
C94
L19
A14
L17
L16
C33
L7
R1
A5
R2
R87
M16
R83
A3

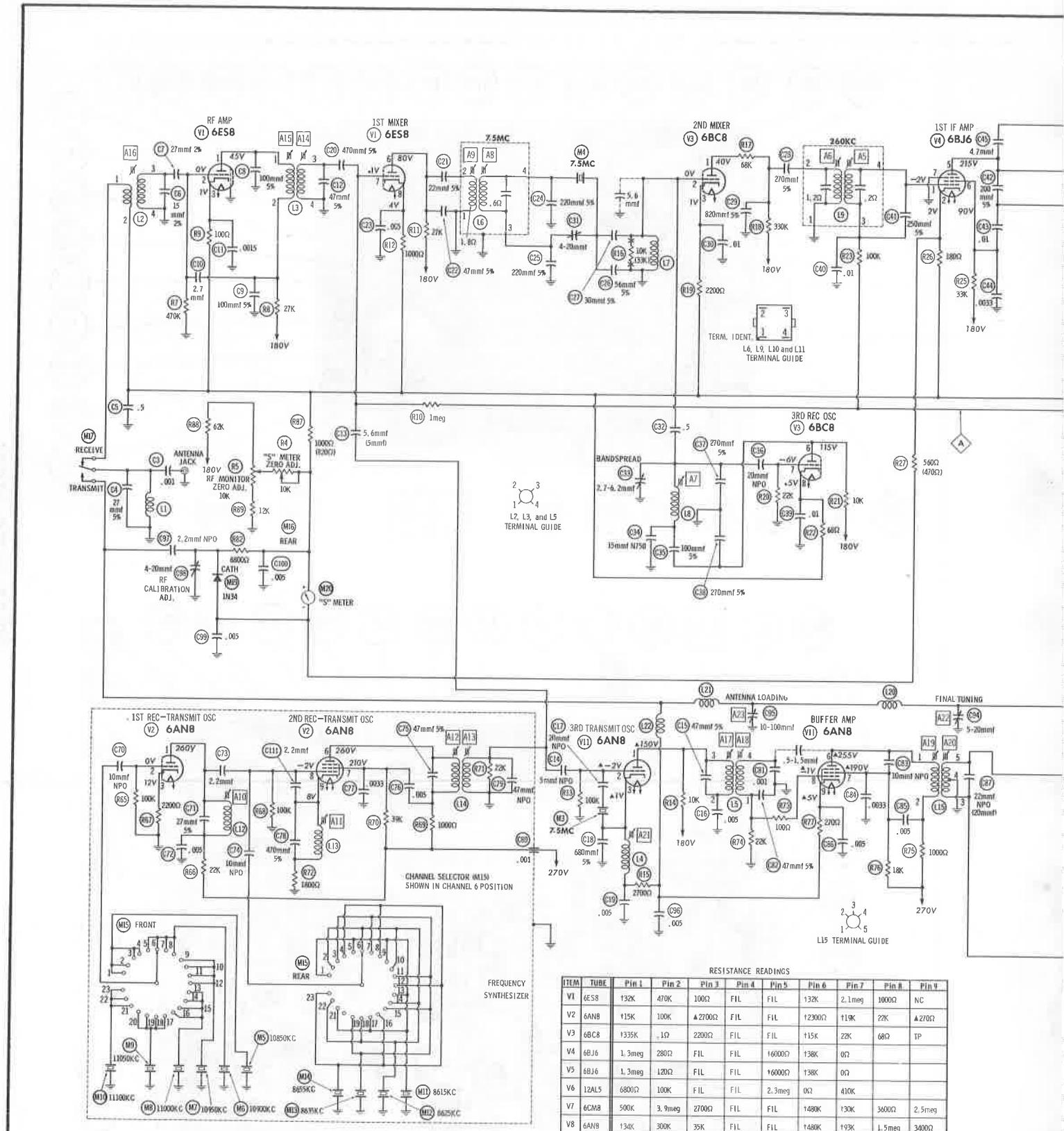

1. Voltage measurements taken with vacuum tube voltmeter.
2. All controls set for normal operation, no signal applied.
3. Measured values are from socket pin or terminal to common ground.
4. All terminals viewed from bottom unless otherwise designated.
5. Numbers assigned to terminals may not be found on the unit.
6. Supply voltage maintained at rated value for voltage readings.

A PHOTOFACT STANDARD NOTATION SCHEMATIC

©Howard W. Sams & Co., Inc. 1964

RESISTANCE READINGS

ITEM	TUBE	Pin 1	Pin 2	Pin 3	Pin 4	Pin 5	Pin 6	Pin 7	Pin 8	Pin 9
V1	6ES8	†32K	470K	100Ω	FIL	FIL	†32K	2.1meg	1000Ω	NC
V2	6AN8	†15K	100K	▲2700Ω	FIL	FIL	†2300Ω	†19K	22K	▲270Ω
V3	6BC8	†335K	.1Ω	2200Ω	FIL	FIL	†15K	22K	68Ω	TP
V4	6BJ6	1.3meg	280Ω	FIL	FIL	†6000Ω	†38K	0Ω		
V5	6BJ6	1.3meg	120Ω	FIL	FIL	†6000Ω	†38K	0Ω		
V6	12AL5	6800Ω	100K	FIL	FIL	2.3meg	0Ω	410K		
V7	6CM8	500K	3.9meg	2700Ω	FIL	FIL	†480K	†30K	3600Ω	2.5meg
V8	6AN8	†34K	300K	35K	FIL	FIL	†480K	†93K	1.5meg	3400Ω
V9	6AQ5	NC	300Ω	FIL	FIL	†277Ω	†1327Ω	270K		
V10	6AQ5	270K	300Ω	FIL	FIL	†277Ω	†1327Ω	NC		
V11	6AN8	†23K	100K	2200Ω	FIL	FIL	†2300Ω	†42K	100K	1800Ω
V12	12BH7A	†5000Ω	▲7500Ω	▲610Ω	FIL	FIL	▲510Ω	†7500Ω	†5150Ω	NC

ALL MEASUREMENTS TAKEN IN "RECEIVE" POSITION UNLESS OTHERWISE DESIGNATED.
† MEASURED FROM OUTPUT OF BRIDGE RECTIFIER.
▲ MEASURED IN "TRANSMIT" POSITION. TP TIE POINT NC NO CONNECTION

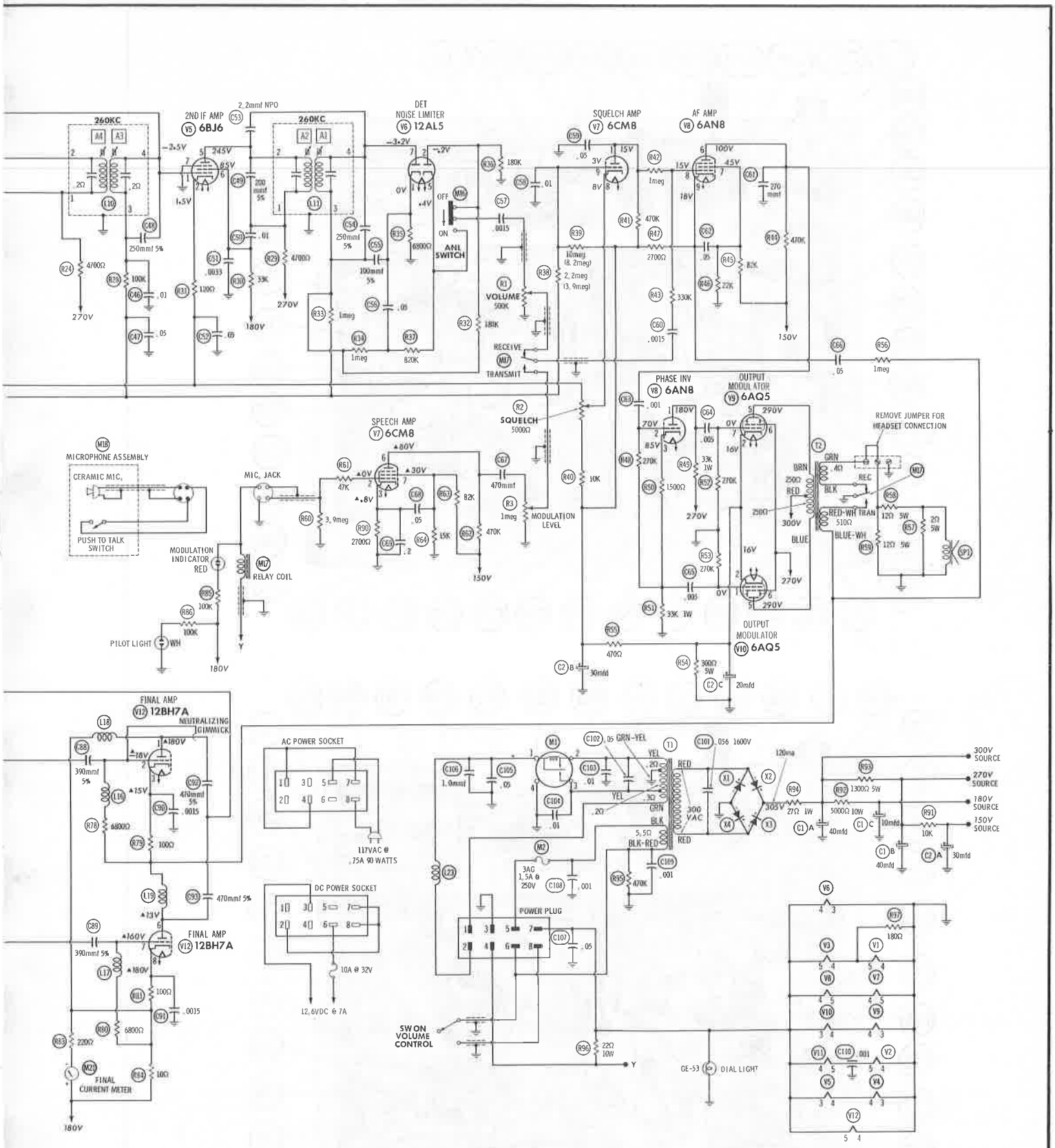

OLSON MODEL RA-590

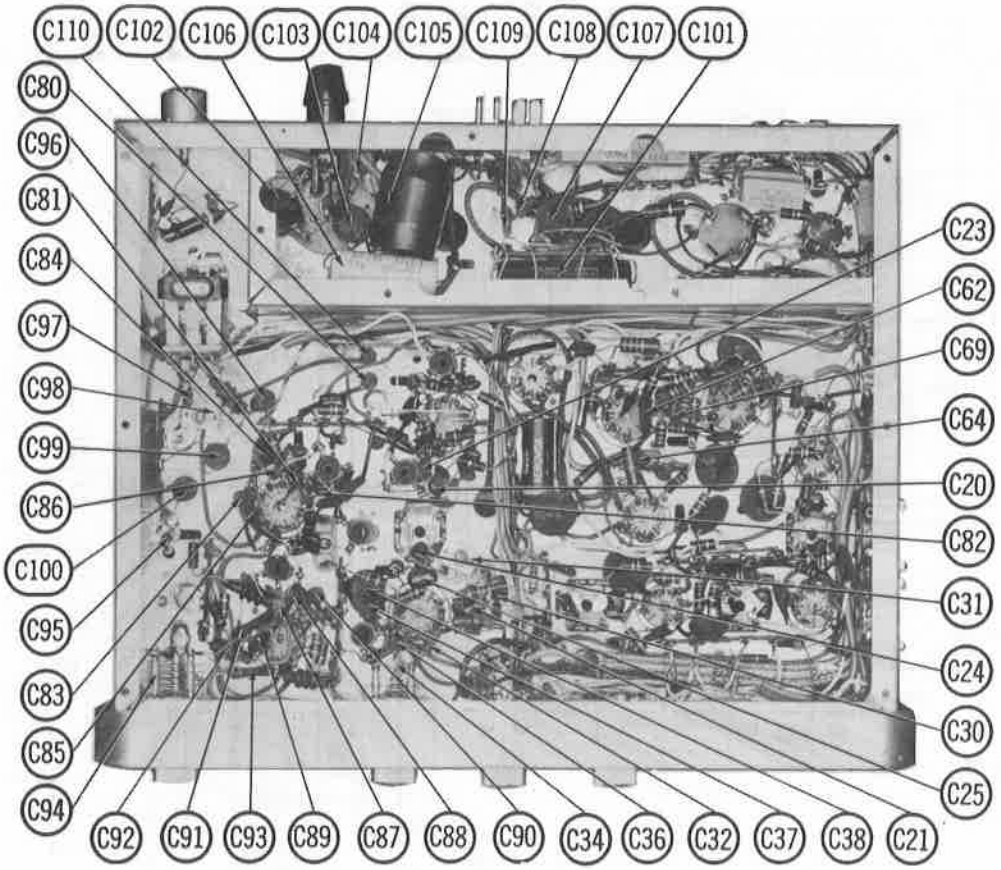
C110
C102
C106
C103
C104
C105
C109
C108
C107
C101
C80
C96
C81
C84
C97
C98
C99
C86
C100
C95
C83
C85
C94
C23
C62
C69
C64
C20
C82
C31
C24
C30
C25
C92
C91
C93
C89
C87
C88
C90
C34
C36
C32
C37
C38
C21

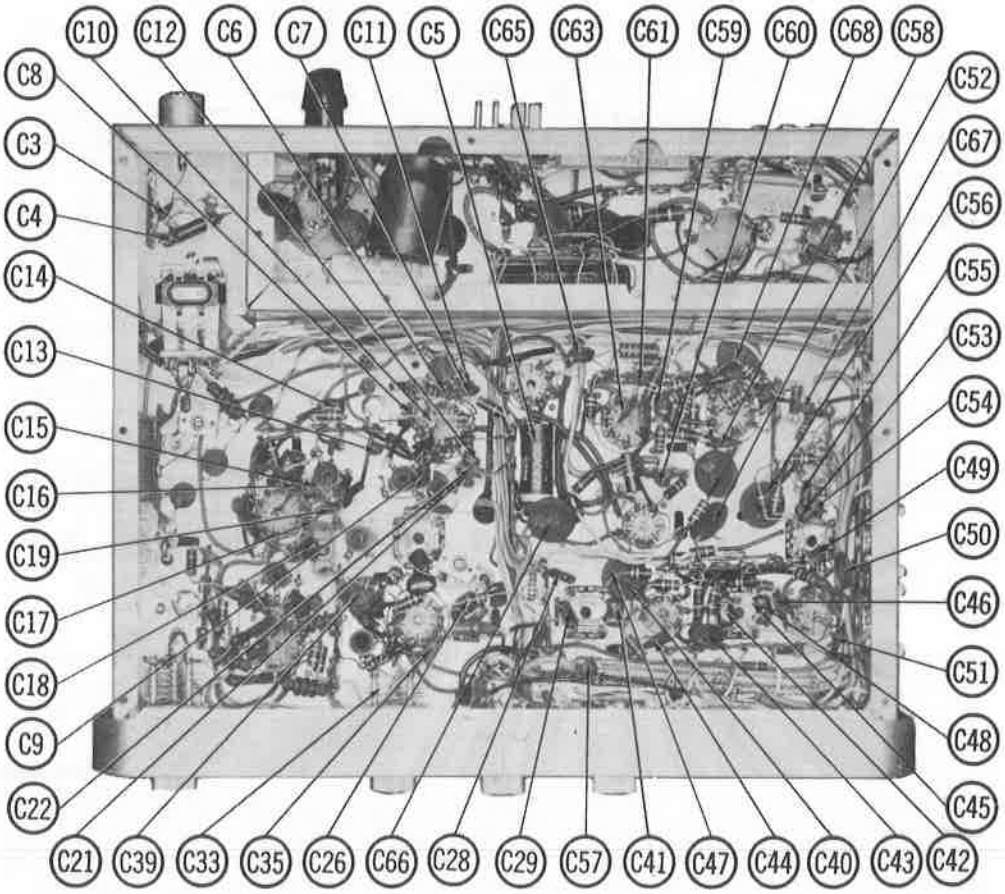
C10
C12
C6
C7
C11
C5
C65
C63
C61
C59
C60
C68
C58
C8
C3
C4
C14
C13
C15
C16
C19
C17
C18
C9
C22
C52
C67
C56
C55
C53
C54
C49
C50
C46
C51
C48
C45
C21
C39
C33
C35
C26
C66
C28
C29
C57
C41
C47
C44
C40
C43
C42

PARTS LIST AND DESCRIPTION

WIRING DATA

General-use Hook-up Wire	Use BELDEN No.	8530 (Solid) Available in 12 Colors
		8524 (Stranded) Available in 12 Colors
Shielded Antenna Lead	Use BELDEN No.	8214 Lowest Loss (RG-8/U Type)
		8237 Low Loss (RG-8/U)
		8240 (Solid) Miniature (RG-58/U)
		8259 (Stranded) Miniature (RG-58A/U)
Coiled Microphone Cable	Use BELDEN No.	8497 3 Conductor- 1 Shielded for Press-to-Talk (Neoprene)
		8496 3 Conductor- 1 Shielded for Press-to-Talk (Vinyl)
Ignition Noise Suppression	Use BELDEN No.	7300-Series Spark-Plug Sets
Bonding Strap	Use BELDEN No.	8661 (3/8 in.)

TUBES

◆ AMPEREX ◆ GENERAL ELECTRIC ◆ RCA ◆ RAYTHEON ◆ SYLVANIA ◆

ITEM No.	USE	TYPE	ITEM No.	USE	TYPE
V1	RF Amp. -1st Mixer	6ES8	V6	Det. -Noise Limiter	12AL5
V2	1st Rec. Osc. -1st Trans. Osc. 2nd Rec. Osc. - 2nd Trans. Osc.	6AN8	V7	Squelch Amp. -Speech Amp.	6CM8
V3	2nd Mixer-3rd Rec. Osc.	6BC8	V8	AF Amp. -Phase Inverter	6AN8
V4	1st IF Amp.	6BJ6	V9	Output-Modulator	6AQ5
V5	2nd IF Amp.	6BJ6	V10	Output-Modulator	6AQ5
			V11	3rd Trans. Osc. -Buffer	6AN8
			V12	Final Amp.	12BH7A

POWER RECTIFIERS

ITEM No.	MEASURED CURRENT	ORIGINAL Part or Type No.	RECTIFIERS MALLORY PART No.	RCA PART No.	SARKES TARZIAN PART No.
X1	.120A		A300 or FW300	1N3194 or 1N2861	2F4
X2	.120A		A300 or FW300	1N3194 or 1N2861	2F4
X3	.120A		A300 or FW300	1N3194 or 1N2861	2F4
X4	.120A		A300 or FW300	1N3194 or 1N2861	2F4

ELECTROLYTIC CAPACITORS

ITEM No.	RATING CAP.	RATING VOLT.	REPLACEMENT DATA OLSON PART No.	AEROVOX PART No.	CORNELL-DUBILIER PART No.	GENERAL ELECTRIC PART No.	GENERAL INSTRUMENT PART No.	MALLORY PART No.	SPRAGUE PART No.
C1A	▲40	450		AFH3-43	C0340	XC3-29	TMT-3742	FP376.8	TVL-3785
B	■40	450							
C	▲10	450							
C2A	▲30	350		AFH3-109	C0830	XC3-10	TMT-3361	FP330A	TVL-3636
B	■30	350							
C	▲20	25							

FIXED CAPACITORS

ITEM No.	RATING	REMARKS	REPLACEMENT DATA AEROVOX PART No.	CENTRALAB PART No.	CORNELL-DUBILIER PART No.	ELMENCO PART No.	MALLORY PART No.	SPRAGUE PART No.
C3	.001		BPD-001	DD-102	BYA10D1	CCD-102	B-210	5HK-D10
C4	27 5%		1469-000027	TCZ-27	22R5Q27	CM-19B-270J	CNO-427	MS-427
C5	.5 200V		P288N-5		CUB2P5	2DP-5-504	GEM-205	2TM-P50
C6	15 2%		1469-000015	TCZ-15	22P5Q15	CM-15E-150		
C7	27 2%		1469-000027	TCZ-27	22R5Q27	CM-19B-270J	CNO-427	MS-427
C8	100 5%		1469-0001	TCZ-100	22R5T1	CM-15E-101	MCE235	MS-31
C9	100 5%		1469-0001	TCZ-100	22R5T1	CM-15E-101	MCE235	MS-31
C10	2.7		NPO-DI 2.7	TCZ-2.7	C10V27C	CCTO-2R7	CNO-527	10TCC-V27
C11	.0015		BPD-0015	DD-152	LA10D15-C4	CCD-152	B-215	10TS-D15
C12	47 5%		1469-000047	TCZ-47	22R5Q47	CM-15E-470		MS-447
C13	5.6	(5) †	NPO-DI 5	TCZ-4.7	C10V47C	CCTO-4R7	CNO-547	10TCC-V47
C14	5 NPO		NPO-DI 5	TCZ-4.7	C10V47C	CCTO-4R7	CNO-547	10TCC-V47
C15	47 5%		1469-000047	TCZ-47	22R5Q47	CM-15E-470		MS-447
C16	.005		BPD-005	DD-502	BYA10D5	CCD-502	B-250	5HK-D50
C17	20 NPO		NPO-SI 20	TCZ-22	C10Q20C	CCTO-200	CNO-420	10TCC-Q20
C18	680 5%		1469-00068	TCZ-680		CM-15E-681		
C19	.005		BPD-005	DD-502	BYA10D5	CCD-502	B-250	5HK-D50
C20	470 5%		1469-00047		22R5T47	CM-19B-471J		
C21	22 5%		CI-22	TCZ-22	C10Q22C	CCD-220	CNO-422	10TCC-Q22
C22	47 5%		1469-000047	TCZ-47	22R5Q47	CM-15E-470		MS-447
C23	.005		BPD-005	DD-502	BYA10D5	CCD-502	B-250	5HK-D50
C24	220 5%		1469-00022		22R5T22	CM-19B-221J		
C25	220 5%		1469-00022		22R5T22	CM-19B-221J		
C26	56 5%		1469-000056	TCZ-56	22R5Q56	CM-15E-560		MS-456
C27	30 5%		1469-00003	TCZ-30	22R5Q30	CM-15E-300		
C28	270 5%		1469-00027	TCZ-270	22R5T27	CM-15E-271		
C29	820 5%		DI-820	DD-821	5R5T82	CCD-821	GP382	10TS-T82
C30	.01		BPD-01	DD-103	BYA10S1	CCD-103	B-110	5HK-S10
C31	4-20							
C32	.5							
C33	2.7-6.2							
C34	15 N750							
C35	100 5%		1469-0001		22R5T10	CM-19B-101J		
C36	20 NPO		NPO-SI 20	TCZ-20	C10Q20C	CCD-200	CNO-420	10TCC-Q20
C37	270 5%		1469-00027		22R5T27	CM-19B-271J		
C38	270 5%		1469-00027		22R5T27	CM-19B-271J		
C39	.01		BPD-01	DD-103	BYA10S1	CCD-103	B-110	5HK-S10
C40	.01		BPD-01	DD-103	BYA10S1	CCD-103	B-110	5HK-S10
C41	250 5%		1469-00025		22R5T25	CM-19B-251J		
C42	200 5%		1469-0002		22R5T20	CM-19B-201J		
C43	.01		BPD-01	DD-103	BYA10S1	CCD-103	B-110	5HK-S10
C44	.0033		BPD-0033	DD-332	BYA10D33	CCD-332	B-233	5HK-D33
C45	4.7		NPO-SI 4.7	TCZ-4R7	C10V47C	CCTO-4R7	CNO-547	10TCC-V47
C46	.01		BPD-01	DD-103	BYA10S1	CCD-103	B-110	5HK-S10
C47	.05		BPD-05	DD-503	CUB2S5	1DP-2-503	BT-150	5HK-S50
C48	250 5%		1469-00025		22R5T25	CM-19B-251J		
C49	200 5%		1469-0002		22R5T20	CM-19B-221J		
C50	.01		BPD-01	DD-103	BYA10S1	CCD-103	B-110	5HK-S10
C51	.0033		BPD-0033	DD-332	BYA10D33	CCD-332	B-233	5HK-D33
C52	.05		BPD-05	DD-503	CUB2S5	1DP-2-503	BT-150	5HK-S50

PARTS LIST AND DESCRIPTION (CONTINUED)

FIXED CAPACITORS (cont)

ITEM No.	RATING	REMARKS	REPLACEMENT DATA					
			AEROVOX PART No.	CENTRALAB PART No.	CORNELL-DUBILIER PART No.	ELMENCO PART No.	MALLORY PART No.	SPRAGUE PART No.
C53	2.2 NPO		NPO-SI 2.2	TCZ-2R2	C10V22C	CCTO-2R2	CNO-522	10TCC-V22
C54	250 5%		1469-00025		22R5T25	CM-19B-251J		
C55	100 5%		1469-0001		22R5T1	CM-19B-101J		
C56	.05		BPD-05	DD-503	CUB2S5	1DP-2-503	BT-150	5HK-S50
C57	.0015		BPD-0015	DD-152	LA10D15-C4	CCD-152	B-215	10TS-D15
C58	.01		BPD-01	DD-103	BYA10S1	CCD-103	B-110	5HK-S10
C59	.05		BPD-05	DD-503	CUB2S5	1DP-2-503	BT-150	5HK-S50
C60	.0015		BPD-0015	DD-152	LA10D15-C4	CCD-152	B-215	10TS-D15
C61	270		DI-270	DD-271	LA10T27	CCD-271	B-327	10TS-T27
C62	.05		BPD-05	DD-503	CUB2S5	1DP-2-503	BT-150	5HK-S50
C63	.001		EF-001	MFT-1000		CCF-102	CT280A	
C64	.005		BPD-005	DD-502	BYA10D5	CCD-502	B-250	5HK-D50
C65	.005		BPD-005	DD-502	BYA10D5	CCD-502	B-250	5HK-D50
C66	.05		BPD-05	DD-503	CUB2S5	1DP-2-503	BT-150	5HK-S50
C67	470		BPD-00047	DD-471	BYA10T47	CCD-471	B-347	10TS-T47
C68	.05		BPD-05	DD-503	CUB2S5	1DP-2-503	BT-150	5HK-S50
C69	.2							
C70	10 NPO		NPO-SI 10	D6-100	LA10Q1	CCD-100	GP410	10TS-Q10
C71	27 5%		NPO-SI 27	D6-270	LA10Q27	CCD-270	GP427	10TS-Q27
C72	.005		BPD-005	DD-502	BYA10D5	CCD-502	B-250	5HK-D50
C73	2.2		NPO-SI 2.2	TCZ-2R2	C10V22C	CCTO-2R2	CNO-522	10TCC-V22
C74	10 NPO		NPO-SI 10	D6-100	LA10Q1	CCD-100	GP410	10TS-Q10
C75	47 5%		1469-000047	TCZ-47	22R5Q47	CM-19B-470K	MCB-471	MS-447
C76	.005		BPD-005	DD-502	BYA10D5	CCD-502	B-250	5HK-D50
C77	.0033		BPD-0033	DD-332	BYA10D33	CCD-332	B-233	5HK-D33
C78	470 5%		1469-00047		22R5T47	CM-19B-471J		
C79	47 NPO		NPO-DI 47	TCZ-47	C10Q47C	CCTO-470	CNO-447	10TCC-Q47
C80	.001		BPD-001	DD-102	BYA10D1	CCD-102	B-210	5HK-D10
C81	.001		BPD-001	DD-102	BYA10D1	CCD-102	B-210	5HK-D10
C82	47 5%		NPO-DI 47	TCZ-47	C10Q47C	CCTO-470	CNO-447	10TCC-Q47
C83	10 NPO		NPO-SI 10	D6-100	LA10Q1	CCD-100	GP410	10TS-Q10
C84	.0033		BPD-0033	DD-332	BYA10D33	CCD-332	B-233	5HK-D33
C85	.005		BPD-005	DD-502	BYA10D5	CCD-502	B-250	5HK-D50
C86	.005		BPD-005	DD-502	BYA10D5	CCD-502	B-250	5HK-D50
C87	22 NPO	(20) †	NPO-SI 20	D6-220	LA10Q22	CCD-220	GP422	10TS-Q22
C88	390 5%		1469-00039		22R5T39	CM-19B-391J		
C89	390 5%		1469-00039		22R5T39	CM-19B-391J		
C90	.0015		BPD-0015	DD-152	LA10D15-C4	CCD-152	B-215	10TS-D15
C91	.0015		BPD-0015	DD-152	LA10D15-C4	CCD-152	B-215	10TS-D15
C92	470 5%		1469-00047		22R5T47	CM-19B-471J		
C93	470 5%		1469-00047		22R5T47	CM-19B-471J		
C94	5-20							
C95	10-100							
C96	.005		BPD-005	DD-502	BYA10D5	CCD-502	B-250	5HK-D50
C97	2.2 NPO		NPO-SI 2.2	TCZ-2R2	C10V22C	CCTO-2R2	CNO-522	10TCC-V22
C98	4-20							
C99	.005		BPD-005	DD-502	BYA10D5	CCD-502	B-250	5HK-D50
C100	.005		BPD-005	DD-502	BYA10D5	CCD-502	B-250	5HK-D50
C101	.056 1600V							
C102	.05		BPD-05	DD-503	CUB2S5	1DP-2-503	BT-150	5HK-S50
C103	.01		BPD-01	DD-103	BYA10S1	CCD-103	B-110	5HK-S10
C104	.01		BPD-01	DD-103	BYA10S1	CCD-103	B-110	5HK-S10
C105	.05		BPD-05	DD-503	CUB6S5	6DP-3-503	GP150	6PS-S50
C106	1.0 100V		P288N-1.		CUB2W1		GEM-21	2TM-M1
C107	.05		BPD-05	DD-503	CUB6S5	6DP-3-503	GP150	6PS-S50
C108	.001		BPD-001	DD-102	BYA10D1	CCD-102	B-210	5HK-D10
C109	.001		BPD-001	DD-102	BYA10D1	CCD-102	B-210	5HK-D10
C110	.001		BPD-001	DD-102	BYA10D1	CCD-102	B-210	5HK-D10
C111	2.2		NPO-SI 2.2	TCZ-2R2	C10V22C	CCTO-2R2	CNO-522	10TCC-V22

† Alternate Value.

CONTROLS

All wattages 1/2 watt, or less, unless otherwise listed.

ITEM No.	USE	RESISTANCE	REPLACEMENT DATA				
			OLSON PART No.	CENTRALAB PART No.	CLAROSTAT PART No.	CTS–IRC PART No.	MALLORY PART No.
R1	Volume	500K		F2-500K, SU-204 or (B-60)	A47-500K-Z, KSS-3		RU55A, SL38, US42, or (UA55A, SF1000) or (U48)
R2	Squelch	5000Ω		F2-5000, SU-204, or (B-11)	A47-5000-S, KSS-3		
R3	Modulation Level	1meg		TT-70 †, or (F2-1meg, SN010, AK-38)	B47-1meg-Z †		PTA1254L
R4	"S" Meter Zero Adj.	10K		TT-14 †	B47-10K-S †		TA14L
R5	RF Monitor Zero Adj.	10K		TT-14 †	B47-10K-S †		TA14L

† Cut Shaft and File new adjusting Slot.

RESISTORS (Power and Special)

ITEM No.	RATING	REPLACEMENT DATA		
		IRC PART No.	WORKMAN PART No.	REMARKS
R54	300Ω 5W	PW5-300	5W-SQ-300	
R57	2Ω 5W	PW5-2	5W-SQ-2	
R58	12Ω 5W	PW5-12	5W-SQ-12	
R59	12Ω 5W	PW5-12	5W-SQ-12	

ITEM No.	RATING	REPLACEMENT DATA		
		IRC PART No.	WORKMAN PART No.	REMARKS
R92	5000Ω 10W	PW10-5000	10W-SQ-5000	
R93	1300Ω 5W	PW5-1300	5W-SQ-1300	
R96	22Ω 10W	PW10-22	10W-SQ-22	

PARTS LIST AND DESCRIPTION (CONTINUED)

COILS (RF-IF)

ITEM No.	USE	REPLACEMENT DATA					NOTES
		OLSON PART No.	MERIT PART No.	MILLER PART No.	STANCOR PART No.	WORKMAN PART No.	
L1	Antenna Load(1.3uh)						
L2	Antenna						
L3	RF Interstage						
L4	3rd Trans. Osc.						
L5	Trans. Osc. Coup.						
L6	7.5MC IF						
L7	2nd Mixer Grid						
L8	3rd Rec. Osc.						
L9	1st 260KC IF						
L10	2nd 260KC IF						
L11	3rd 260KC IF						
L12	1st Rec.-Trans. Osc.						
L13	2nd Rec.-Trans. Osc.						
L14	Osc. Coupling						
L15	Final RF Coup.						
L16	RF Choke						
L17	RF Choke						
L18	RF Choke						
L19	RF Choke						
L20	RF Output Coup.						
L21	RF Output Coup.						
L22	RF Choke						
L23	Hash Suppressor						

TRANSFORMER (POWER)

ITEM No.	RATING			REPLACEMENT DATA					NOTES
	PRI.	SEC. 1	SEC. 2	OLSON PART No.	MERIT PART No.	STANCOR PART No.	THORDARSON PART No.	TRIAD PART No.	
T1	117VAC @.750A (or)12.6V DC @ 7A	150VAC @.12A DC	12.6V @ 5A						

TRANSFORMER (AUDIO OUTPUT)

ITEM No.	IMPEDANCE		REPLACEMENT DATA					NOTES
	PRI.	SEC. 1	OLSON PART No.	MERIT PART No.	STANCOR PART No.	THORDARSON PART No.	TRIAD PART No.	
T2	5000ΩCT	3-4Ω						
		SEC. 2						
		500Ω DC Res.						

SPEAKER

ITEM No.	TYPE	REPLACEMENT DATA		NOTES
		OLSON PART No.	QUAM PART No.	
SP1	3" x 5" PM 3-4Ω		35A05	

VIBRATOR

ITEM No.	TYPE	INPUT VOLTS	FRE-QUENCY	REPLACEMENT DATA			NOTES
				OLSON PART No.	CORNELL-DUBILIER PART No.	MALLORY PART No.	
M1	Interrupter	12.6V	115~		6301	G-1501	

FUSES

ITEM No.	TYPE	RATING	REPLACEMENT DATA					
			OLSON PART No.		LITTELFUSE PART No.		BUSS PART No.	
			FUSE	HOLDER	FUSE	HOLDER	FUSE	HOLDER
M2	3AG	1½A 250V 10A 32V	①		31201.5 (3AG 1½A 250V)	342001	AGC 1½	HKP

① DC Operation only.

MISCELLANEOUS

ITEM No.	PART NAME	OLSON PART No.	NOTES
M3	Crystal		7.500MC (Transmit)
M4	Crystal		7.500MC (Receive)
M5	Crystal		10.850MC (Channels 1 thru 4)
M6	Crystal		10.900MC (Channels 5 thru 8)
M7	Crystal		10.950MC (Channels 9 thru 12)
M8	Crystal		11.000MC (Channels 13 thru 16)
M9	Crystal		11.050MC (Channels 17 thru 20)
M10	Crystal		11.100MC (Channels 21 thru 23)
M11	Crystal		8.615MC (Channels 1, 5, 9, 13, 17, 21)
M12	Crystal		8.625MC (Channels 2, 6, 10, 14, 18, 22)
M13	Crystal		8.635MC (Channels 3, 7, 11, 15, 19)
M14	Crystal		8.655MC (Channels 4, 8, 12, 16, 20, 23)
M15	Switch		Crystal Selector
M16	Switch		ANL-Slide Type
M17	Relay		Receive-Transmit
M18	Microphone Ass'y.		Includes Push-to-talk Switch
M19	Meter Rectifier		1N34
M20	S Meter		
M21	Meter		Final Current