PHOTOFACT®

TRADE NAME:	Regency Model "Range Gain"
SUPPLIER:	Regency Electronics, Inc. 7900 Pendleton Pike, Indianapolis 26, Ind.
TYPE SET:	12 Tube Transceiver
POWER SUPPLY:	110 – 120 VAC, 60 Cycles (or) 12 Volt Storage Battery
RATING:	90 Watts, .75 Amp. @117VAC (or) 7 Amp. @12.6VDC
TUNING RANGE:	All 23 CB Channels

REGENCY MODEL RANGE GAIN

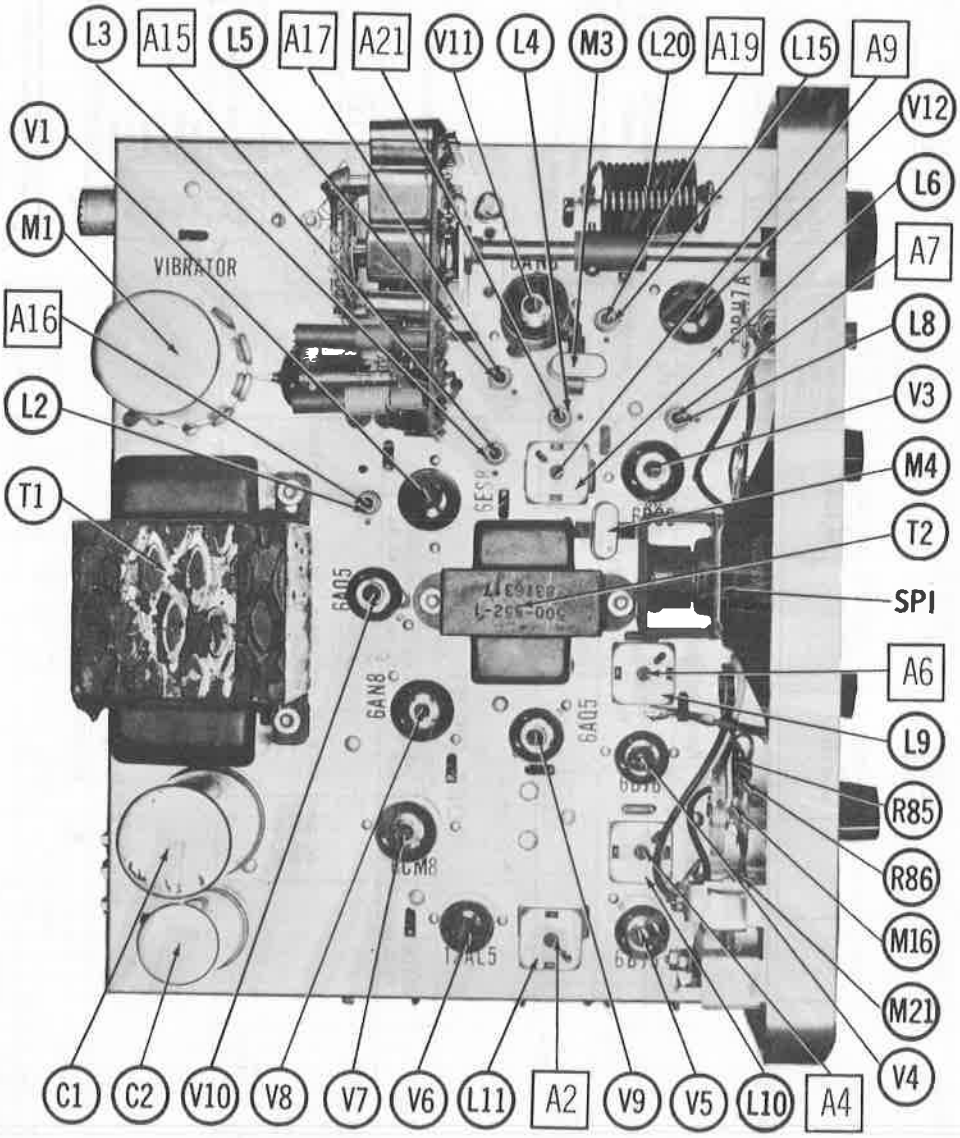

HOWARD W. SAMS & CO., INC. Indianapolis 6, Indiana

 © 1964 Howard W. Sams & Co., Inc. Printed in U. S. of America PY253

ALIGNMENT INSTRUCTIONS

Suggested Alignment Tools:

A1 thru A6	GENERAL CEMENT #5097, 8727 WALSCO #2515
A7 thru A21	GENERAL CEMENT #8282, 8606, 8606L WALSCO #2526, 2543, 2544
A22, A23	GENERAL CEMENT #8721, 8722 WALSCO #2519

RECEIVER ALIGNMENT

Connect DC VTVM between point (A) and ground.

SIGNAL GENERATOR	CHANNEL	ADJUST	REMARKS
High side thru .001mfd to pin 2 (grid) of V3 (2nd Mixer), low side to ground. Tune to 260KC.	Any	A1 thru A6	Adjust for maximum.
High side to junction of M4 and C27. Tune to 7.502MC, 20UV.	"	A7	Set C33 (tune) to mid-range. Adjust A7 for maximum audio signal or meter deflection. Retune generator to 7MC. The image will be SLIGHTLY stronger if A7 is properly adjusted.
High side to pin 7 (grid) of V1 (1st Mixer). Tune to 7.5MC.	"	A8, A9	Adjust for maximum.
Use sweep generator. Connect across antenna receptacle. Tune to 27.1MC		A10, A11	Connect a low capacity RF voltmeter to the synthesizer output (junction of C14, C79). Connect a DC VTVM to the junction of C78, R72 (Cathode V2). Adjust A11 for maximum on VTVM. Adjust A10 clockwise for a maximum of 10 volts on RF voltmeter. Readjust A11 for maximum on VTVM and A10 for 10 volts on RF voltmeter. Check all channels. Remove meters.
Use sweep generator. High side to pin 8 (grid) of V2 (2nd Rec. Osc.) low side to ground. Tune to 19.61 MC, 400KC bandwidth.		A12, A13	Connect scope across synthesizer output (C79). Adjust for maximum symetrical bandpass. Remove scope.
Connect signal generator across antenna receptacle. Tune to channel frequency, 400~ Mod.	Center Channel Used.	A14, A15, A16	Adjust for maximum. Check high and low channels.

TRANSMITTER ALIGNMENT

Only those persons properly licensed are permitted to make repairs or adjustments which may result in illegal operation. (Refer to FCC rules and regulations Part 19, Subpart D, Section 19.71).

The frequency of the transmitter should be checked periodically with a secondary frequency standard to insure proper and legal operation.

Best results will be obtained when adjusting the final RF output circuit if the antenna normally used is connected and the chassis is as nearly in the cabinet as possible.

Connect dummy antenna.

SIGNAL GENERATOR	CHANNEL	ADJUST	REMARKS
Connect sweep generator to output of synthesizer (across C79). Tune to 27.1MC, 400KC bandpass.		A17, A18, A19, A20	Connect scope across R78 (grid of V12) with .5mfd in low side. Key transmitter. Adjust for bandpass of 26.95-27.26MC. Remove scope.
Connect DC VTVM across R78 (grid of V12).		A21	Key transmitter. Adjust for 20 volts MINIMUM on all channels.
Connect DC VTVM across R78 (grid of V12). Set meter switch to "C".		A22, A23	Key transmitter. Adjust A22 (Final) for MINIMUM reading on front panel meter. Adjust A23 (Loading) for 14-16MA. Repeat adjustments.
Connect RF voltmeter across antenna receptacle. Set meter switch to "S".		R6, C98	Short C94 (Final). Key transmitter. Adjust R6 for zero reading on front panel meter. Remove short from C94. Adjust C98 (RF Calibration) until meter reading indicates same voltage as RF voltmeter.

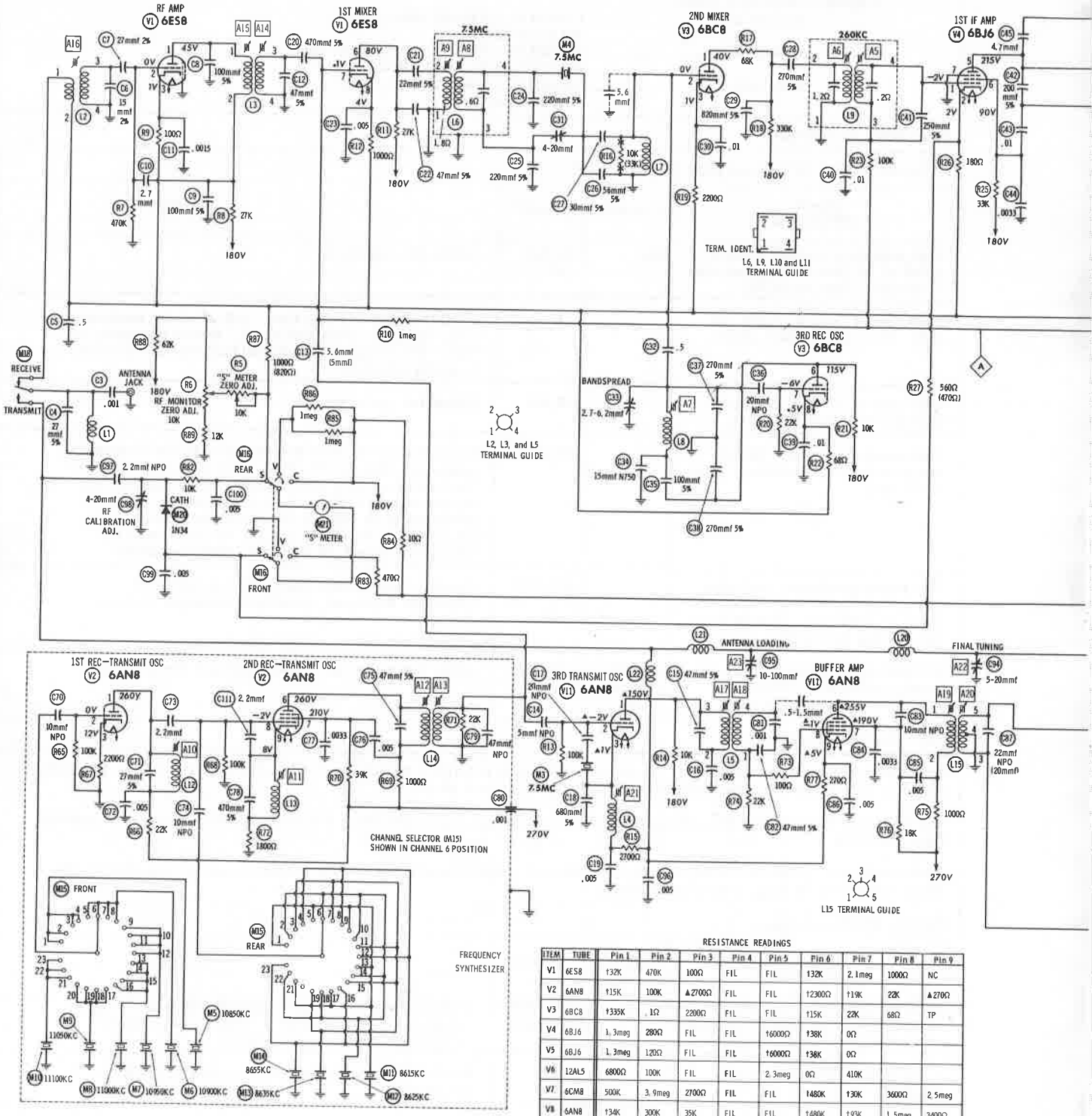

RESISTANCE READINGS

ITEM	TUBE	Pin 1	Pin 2	Pin 3	Pin 4	Pin 5	Pin 6	Pin 7	Pin 8	Pin 9
V1	6ES8	†32K	470K	100Ω	FIL	FIL	†32K	2.1meg	1000Ω	NC
V2	6AN8	†15K	100K	▲2700Ω	FIL	FIL	†2300Ω	†19K	22K	▲270Ω
V3	6BC8	†335K	.1Ω	2200Ω	FIL	FIL	†15K	22K	68Ω	TP
V4	6BJ6	1.3meg	280Ω	FIL	FIL	†6000Ω	†38K	0Ω		
V5	6BJ6	1.3meg	120Ω	FIL	FIL	†6000Ω	†38K	0Ω		
V6	12AL5	6800Ω	100K	FIL	FIL	2.3meg	0Ω	410K		
V7	6CM8	500K	3.9meg	2700Ω	FIL	FIL	†480K	†30K	3600Ω	2.5meg
V8	6AN8	†34K	300K	35K	FIL	FIL	†480K	†93K	1.5meg	3400Ω
V9	6AQ5	NC	300Ω	FIL	FIL	†277Ω	†1327Ω	270K		
V10	6AQ5	270K	300Ω	FIL	FIL	†277Ω	†1327Ω	NC		
V11	6AN8	†23K	100K	2200Ω	FIL	FIL	†2300Ω	†42K	100K	1800Ω
V12	12BH7A	†5000Ω	▲7500Ω	▲610Ω	FIL	FIL	▲510Ω	†7500Ω	†5150Ω	NC

ALL MEASUREMENTS TAKEN IN "RECEIVE" POSITION UNLESS OTHERWISE DESIGNATED.
† MEASURED FROM OUTPUT OF BRIDGE RECTIFIER.
▲ MEASURED IN "TRANSMIT" POSITION. TP TIE POINT NC NO CONNECTION

1. Voltage measurements taken with vacuum tube voltmeter.
2. All controls set for normal operation, no signal applied.
3. Measured values are from socket pin or terminal to common ground.
4. All terminals viewed from bottom unless otherwise designated.
5. Numbers assigned to terminals may not be found on the unit.
6. Supply voltage maintained at rated value for voltage readings.

A PHOTOFACT STANDARD NOTATION SCHEMATIC
©Howard W. Sams & Co., Inc. 1964

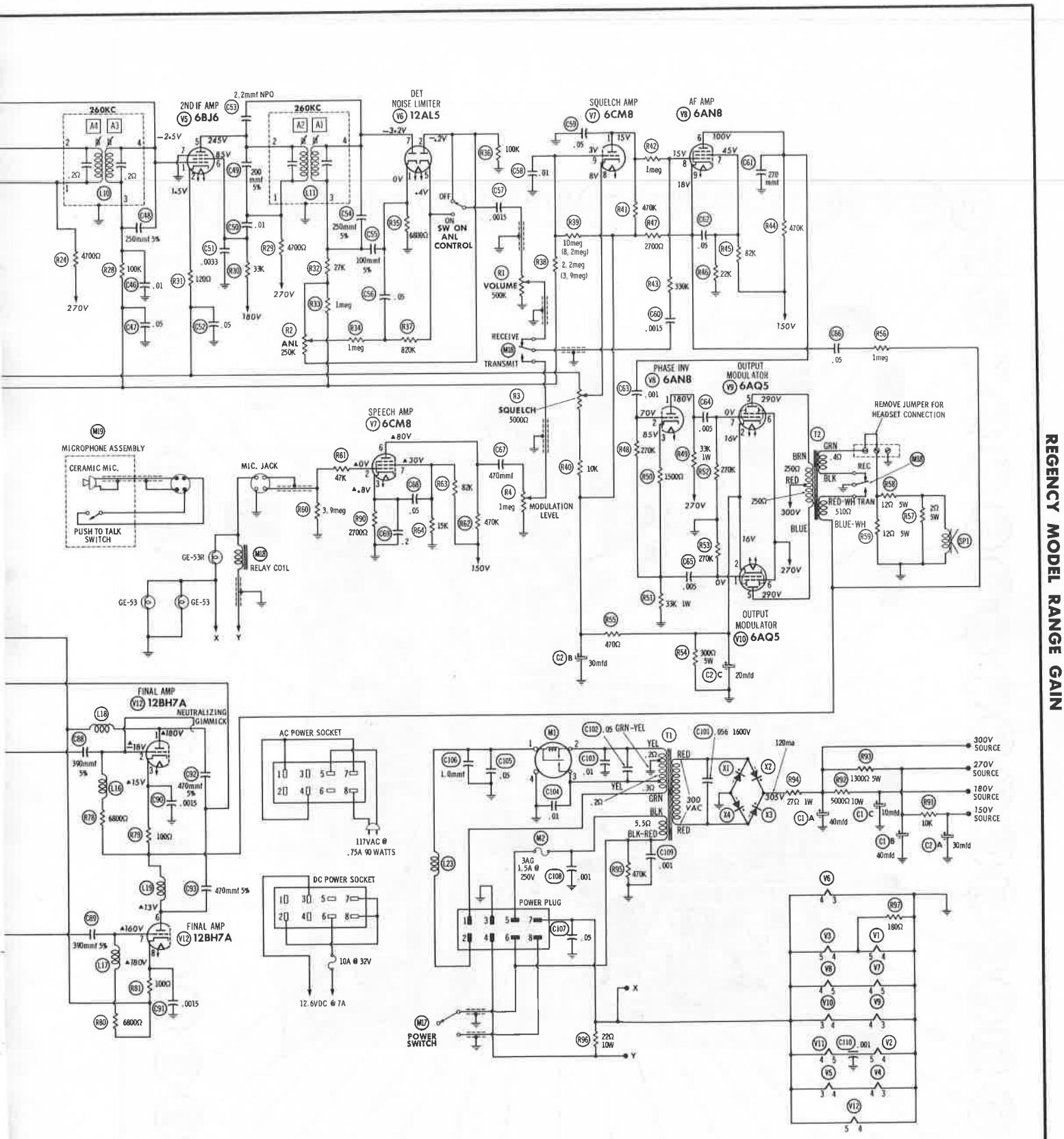
260KC
A4
A3
A2
A1
2ND IF AMP
V5 6BJ6
2.2mmf NPO
C53
DET
NOISE LIMITER
V6 12AL5
SQUELCH AMP
V7 6CM8
AF AMP
V8 6AN8
ON
SW ON
ANL
CONTROL
OFF
VOLUME
500K
R1
ANL
250K
R2
RECEIVE
TRANSMIT
M10
SQUELCH
5000Ω
R3
SPEECH AMP
V7 6CM8
MICROPHONE ASSEMBLY
CERAMIC MIC.
PUSH TO TALK
SWITCH
MIC. JACK
MODULATION
LEVEL
R4
1meg
GE-53R
GE-53
RELAY COIL
M18
PHASE INV
V8 6AN8
OUTPUT
MODULATOR
V9 6AQ5
OUTPUT
MODULATOR
V10 6AQ5
REMOVE JUMPER FOR
HEADSET CONNECTION
T2
SP1
FINAL AMP
V12 12BH7A
NEUTRALIZING
GIMMICK
FINAL AMP
V12 12BH7A
AC POWER SOCKET
117VAC @
.75A 90 WATTS
DC POWER SOCKET
10A @ 32V
12.6VDC @ 7A
POWER PLUG
POWER
SWITCH
M17
3AG
1.5A @
250V
M2
T1
300 VAC
X1
X2
X3
X4
120ma
505V
R94
27Ω 1W
C1 A
40mfd
C1 B
40mfd
C1 C
10mfd
C2 A
30mfd
R93
R92
1300Ω 5W
5000Ω 10W
R91
10K
300V
SOURCE
270V
SOURCE
180V
SOURCE
150V
SOURCE
V6
V3
V1
V8
V7
V10
V9
V13
V2
V5
V4
V12
R97
180Ω
C110
.001
R96
22Ω
10W
X
Y

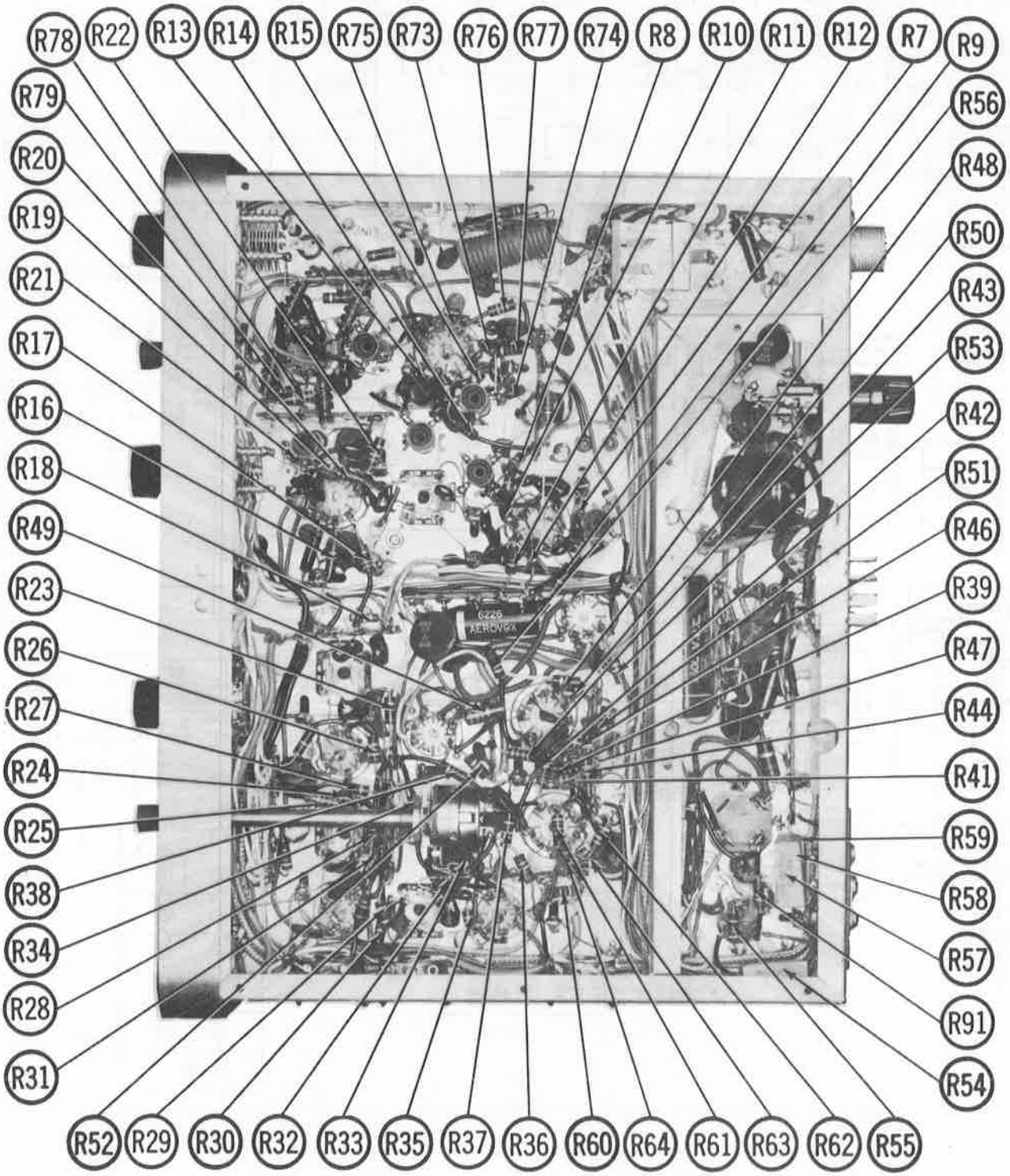
R78
R22
R13
R14
R15
R75
R73
R76
R77
R74
R8
R10
R11
R12
R7
R9
R79
R56
R20
R48
R19
R50
R21
R43
R17
R53
R16
R42
R18
R51
R49
R46
R23
R39
R26
R47
R27
R44
R24
R41
R25
R59
R38
R58
R34
R57
R28
R91
R31
R54
R52
R29
R30
R32
R33
R35
R37
R36
R60
R64
R61
R63
R62
R55

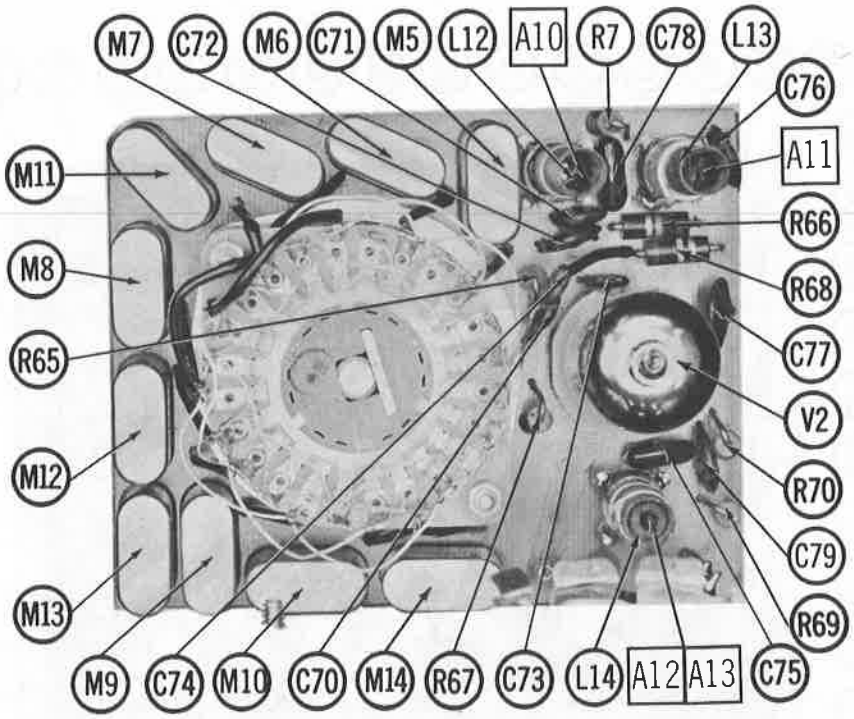
M7
C72
M6
C71
M5
L12
A10
R7
C78
L13
C76
A11
M11
R66
M8
R68
R65
C77
V2
M12
R70
C79
M13
R69
M9
C74
M10
C70
M14
R67
C73
L14
A12
A13
C75

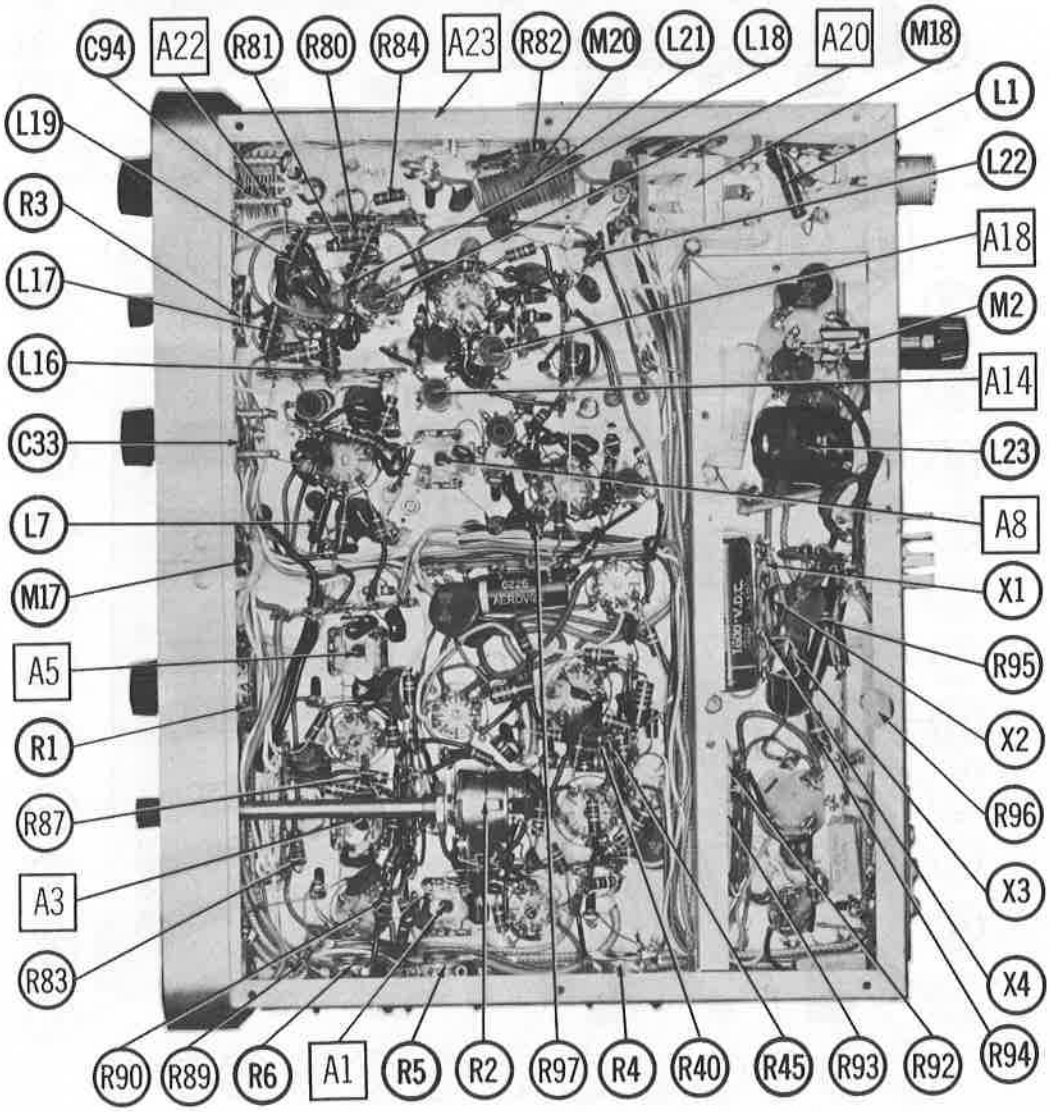
C94
A22
R81
R80
R84
A23
R82
M20
L21
L18
A20
M18
L1
L19
L22
R3
A18
L17
M2
L16
A14
C33
L23
L7
A8
M17
X1
A5
R95
R1
X2
R87
R96
A3
X3
R83
X4
R90
R89
R6
A1
R5
R2
R97
R4
R40
R45
R93
R92
R94

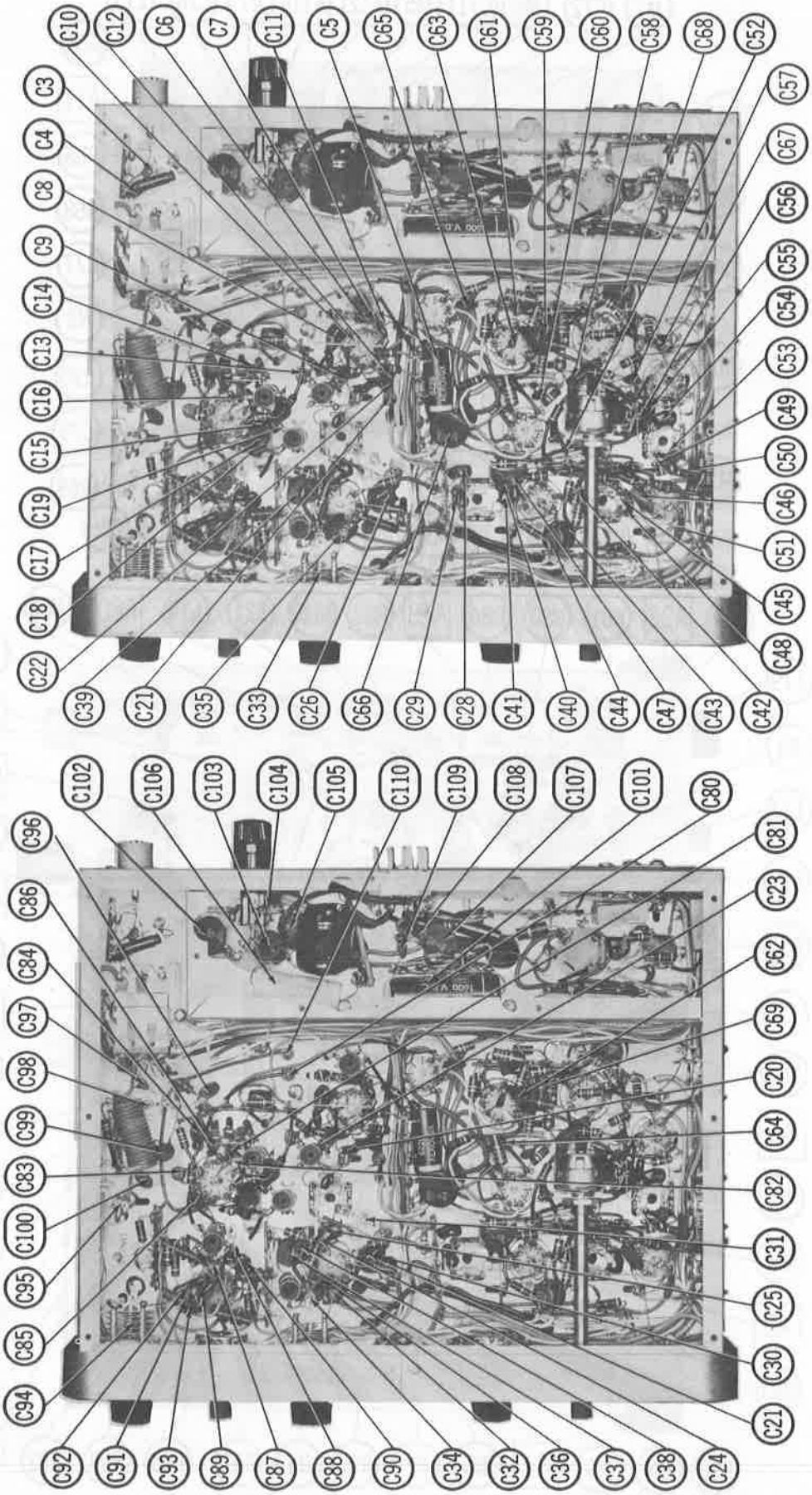
C10
C12
C6
C7
C11
C5
C65
C63
C61
C59
C60
C58
C68
C52
C3
C4
C8
C9
C14
C13
C16
C15
C19
C17
C18
C22
C39
C21
C35
C33
C26
C66
C29
C28
C41
C40
C44
C47
C43
C42
C48
C45
C51
C46
C50
C49
C53
C54
C55
C56
C57
C67
C102
C106
C103
C104
C105
C110
C109
C108
C107
C101
C80
C96
C86
C84
C97
C98
C99
C83
C100
C95
C85
C94
C92
C91
C93
C89
C87
C88
C90
C34
C32
C36
C37
C38
C24
C21
C30
C25
C31
C82
C64
C20
C69
C62
C23
C81

PARTS LIST AND DESCRIPTION

WIRING DATA

General-use Hook-up Wire	Use BELDEN No.	8530 (Solid) Available in 12 Colors
		8524 (Stranded) Available in 12 Colors
Shielded Antenna Lead	Use BELDEN No.	8214 Lowest Loss (RG-8/U Type)
		8237 Low Loss (RG-8/U)
		8240 (Solid) Miniature (RG-58/U)
		8259 (Stranded) Miniature (RG-58A/U)
Coiled Microphone Cable	Use BELDEN No.	8497 3 Conductor- 1 Shielded for Press-to-Talk (Neoprene)
		8496 3 Conductor- 1 Shielded for Press-to-Talk (Vinyl)
Ignition Noise Suppression	Use BELDEN No.	7300-Series Spark-Plug Sets
Bonding Strap	Use BELDEN No.	8861 (3/8 In.)

TUBES

◆ AMPEREX ◆ GENERAL ELECTRIC ◆			◆ RCA ◆ RAYTHEON ◆ SYLVANIA ◆		
ITEM No.	USE	TYPE	ITEM No.	USE	TYPE
V1	RF Amp. -1st Mixer	6ES8	V6	Det. -Noise Limiter	12AL5
V2	1st Rec. Osc. -1st Trans. Osc. 2nd Rec. Osc. - 2nd Trans. Osc.	6AN8	V7	Squelch Amp. -Speech Amp.	6CM8
V3	2nd Mixer -3rd Rec. Osc.	6BC8	V8	AF Amp. -Phase Inverter	6AN8
V4	1st IF Amp.	6BJ6	V9	Output-Modulator	6AQ5
V5	2nd IF Amp.	6BJ6	V10	Output-Modulator	6AQ5
			V11	3rd Trans. Osc. -Buffer	6AN8
			V12	Final Amp.	12BH7A

POWER RECTIFIERS

ITEM No.	MEASURED CURRENT	ORIGINAL Part or Type No.	RECTIFIERS MALLORY PART No.	RCA PART No.	SARKES TARZIAN PART No.
X1	.120A		A300 or FW300	1N3194 or 1N2861	2F4
X2	.120A		A300 or FW300	1N3194 or 1N2861	2F4
X3	.120A		A300 or FW300	1N3194 or 1N2861	2F4
X4	.120A		A300 or FW300	1N3194 or 1N2861	2F4

ELECTROLYTIC CAPACITORS

ITEM No.	RATING CAP.	RATING VOLT.	REPLACEMENT DATA REGENCY PART No.	AEROVOX PART No.	CORNELL-DUBILIER PART No.	GENERAL ELECTRIC PART No.	GENERAL INSTRUMENT PART No.	MALLORY PART No.	SPRAGUE PART No.
C1A	▲40	450							
B	■40	450		AFH3-43	C0340	XC3-29	TMT-3742	FP376.8	TVL-3785
C	▲10	450							
C2A	▲30	350							
B	■30	350		AFH3-109	C0830	XC3-10	TMT-3361	FP330A	TVL-3636
C	▲20	25							

FIXED CAPACITORS

ITEM No.	RATING	REMARKS	REPLACEMENT DATA AEROVOX PART No.	CENTRALAB PART No.	CORNELL-DUBILIER PART No.	ELMENCO PART No.	MALLORY PART No.	SPRAGUE PART No.
C3	.001		BPD-001	DD-102	BYA10D1	CCD-102	B-210	5HK-D10
C4	27 5%		1469-000027	TCZ-27	22R5Q27	CM-19B-270J	CNO-427	MS-427
C5	.5 200V		P288N-5		CUB2P5	2DP-5-504	GEM-205	2TM-P50
C6	15 2%		1469-000015	TCZ-15	22P6Q15	CM-15E-150		
C7	27 2%		1469-000027	TCZ-27	22R5Q27	CM-19B-270J	CNO-427	MS-427
C8	100 5%		1469-0001	TCZ-100	22R5T1	CM-15E-101	MCE235	MS-31
C9	100 5%		1469-0001	TCZ-100	22R5T1	CM-15E-101	MCE235	MS-31
C10	2.7		NPO-DI 2.7	TCZ-2.7	C10V27C	CCTO-2R7	CNO-527	10TCC-V27
C11	.0015		BPD-0015	DD-152	LA10D15-C4	CCD-152	B-215	10TS-D15
C12	47 5%		1469-000047	TCZ-47	22R5Q47	CM-15E-470		MS-447
C13	5.6	(5) †	NPO-DI 5	TCZ-4.7	C10V47C	CCTO-4R7	CNO-547	10TCC-V47
C14	5 NPO		NPO-DI 5	TCZ-4.7	C10V47C	CCTO-4R7	CNO-547	10TCC-V47
C15	47 5%		1469-000047	TCZ-47	22R5Q47	CM-15E-470		MS-447
C16	.005		BPD-005	DD-502	BYA10D5	CCD-502	B-250	5HK-D50
C17	20 NPO		NPO-SI 20	TCZ-22	C10Q20C	CCTO-200	CNO-420	10TCC-Q20
C18	680 5%		1469-00068	TCZ-680		CM-15E-681		
C19	.005		BPD-005	DD-502	BYA10D5	CCD-502	B-250	5HK-D50
C20	470 5%		1469-00047		22R5T47	CM-19B-471J		
C21	22 5%		CI-22	TCZ-22	C10Q22C	CCD-220	CNO-422	10TCC-Q22
C22	47 5%		1469-000047	TCZ-47	22R5Q47	CM-15E-470		MS-447
C23	.005		BPD-005	DD-502	BYA10D5	CCD-502	B-250	5HK-D50
C24	220 5%		1469-00022		22R5T22	CM-19B-221J		
C25	220 5%		1469-00022		22R5T22	CM-19B-221J		
C26	56 5%		1469-000056	TCZ-56	22R5Q56	CM-15E-560		MS-456
C27	30 5%		1469-00003	TCZ-30	22R5Q30	CM-15E-300		
C28	270 5%		1469-00027	TCZ-270	22R5T27	CM-15E-271		
C29	820 5%		DI-820	DD-821	5R5T82	CCD-821	GP382	10TS-T82
C30	.01		BPD-01	DD-103	BYA10S1	CCD-103	B-110	5HK-S10
C31	4-20							
C32	.5							
C33	2.7-6.2							
C34	15 N750							
C35	100 5%		1469-0001		22R5T10	CM-19B-101J		
C36	20 NPO		NPO-SI 20	TCZ-20	C10Q20C	CCD-200	CNO-420	10TCC-Q20
C37	270 5%		1469-00027		22R5T27	CM-19B-271J		
C38	270 5%		1469-00027		22R5T27	CM-19B-271J		
C39	.01		BPD-01	DD-103	BYA10S1	CCD-103	B-110	5HK-S10
C40	.01		BPD-01	DD-103	BYA10S1	CCD-103	B-110	5HK-S10
C41	250 5%		1469-00025		22R5T25	CM-19B-251J		
C42	200 5%		1469-0002		22R5T20	CM-19B-201J		
C43	.01		BPD-01	DD-103	BYA10S1	CCD-103	B-110	5HK-S10
C44	.0033		BPD-0033	DD-332	BYA10D33	CCD-332	B-233	5HK-D33
C45	4.7		NPO-SI 4.7	TCZ-4R7	C10V47C	CCTO-4R7	CNO-547	10TCC-V47
C46	.01		BPD-01	DD-103	BYA10S1	CCD-103	B-110	5HK-S10
C47	.05		BPD-05	DD-503	CUB2S5	1DP-2-503	BT-150	5HK-S50
C48	250 5%		1469-00025		22R5T25	CM-19B-251J		
C49	200 5%		1469-0002		22R5T20	CM-19B-221J		
C50	.01		BPD-01	DD-103	BYA10S1	CCD-103	B-110	5HK-S10
C51	.0033		BPD-0033	DD-332	BYA10D33	CCD-332	B-233	5HK-D33
C52	.05		BPD-05	DD-503	CUB2S5	1DP-2-503	BT-150	5HK-S50

PARTS LIST AND DESCRIPTION (CONTINUED)

FIXED CAPACITORS (cont)

ITEM No.	RATING	REMARKS	REPLACEMENT DATA					
			AEROVOX PART No.	CENTRALAB PART No.	CORNELL-DUBILIER PART No.	ELMENCO PART No.	MALLORY PART No.	SPRAGUE PART No.
C53	2.2 NPO		NPO-SI 2.2	TCZ-2R2	C10V22C	CCTO-2R2	CNO-522	10TCC-V22
C54	250 5%		1469-00025		22R5T25	CM-19B-251J		
C55	100 5%		1469-0001		22R5T1	CM-19B-101J		
C56	.05		BPD-05	DD-503	CUB2S5	1DP-2-503	BT-150	5HK-S50
C57	.0015		BPD-0015	DD-152	LA10D15-C4	CCD-152	B-215	10TS-D15
C58	.01		BPD-01	DD-103	BYA10S1	CCD-103	B-110	5HK-S10
C59	.05		BPD-05	DD-503	CUB2S5	1DP-2-503	BT-150	5HK-S50
C60	.0015		BPD-0015	DD-152	LA10D15-C4	CCD-152	B-215	10TS-D15
C61	270		DI-270	DD-271	LA10T27	CCD-271	B-327	10TS-T27
C62	.05		BPD-05	DD-503	CUB2S5	1DP-2-503	BT-150	5HK-S50
C63	.001		EF-001	MFT-1000		CCF-102	CT280A	
C64	.005		BPD-005	DD-502	BYA10D5	CCD-502	B-250	5HK-D50
C65	.005		BPD-005	DD-502	BYA10D5	CCD-502	B-250	5HK-D50
C66	.05		BPD-05	DD-503	CUB2S5	1DP-2-503	BT-150	5HK-S50
C67	470		BPD-00047	DD-471	BYA10T47	CCD-471	B-347	10TS-T47
C68	.05		BPD-05	DD-503	CUB2S5	1DP-2-503	BT-150	5HK-S50
C69	.2							
C70	10 NPO		NPO-SI 10	D6-100	LA10Q1	CCD-100	GP410	10TS-Q10
C71	27 5%		NPO-SI 27	D6-270	LA10Q27	CCD-270	GP427	10TS-Q27
C72	.005		BPD-005	DD-502	BYA10D5	CCD-502	B-250	5HK-D50
C73	2.2		NPO-SI 2.2	TCZ-2R2	C10V22C	CCTO-2R2	CNO-522	10TCC-V22
C74	10 NPO		NPO-SI 10	D6-100	LA10Q1	CCD-100	GP410	10TS-Q10
C75	47 5%		1469-000047	TCZ-47	22R5Q47	CM-19B-470K	MCB-471	MS-447
C76	.005		BPD-005	DD-502	BYA10D5	CCD-502	B-250	5HK-D50
C77	.0033		BPD-0033	DD-332	BYA10D33	CCD-332	B-233	5HK-D33
C78	470 5%		1469-00047		22R5T47	CM-19B-471J		
C79	47 NPO		NPO-DI 47	TCZ-47	C10Q47C	CCTO-470	CNO-447	10TCC-Q47
C80	.001		BPD-001	DD-102	BYA10D1	CCD-102	B-210	5HK-D10
C81	.001		BPD-001	DD-102	BYA10D1	CCD-102	B-210	5HK-D10
C82	47 5%		NPO-DI 47	TCZ-47	C10Q47C	CCTO-470	CNO-447	10TCC-Q47
C83	10 NPO		NPO-SI 10	D6-100	LA10Q1	CCD-100	GP410	10TS-Q10
C84	.0033		BPD-0033	DD-332	BYA10D33	CCD-332	B-233	5HK-D33
C85	.005		BPD-005	DD-502	BYA10D5	CCD-502	B-250	5HK-D50
C86	.005		BPD-005	DD-502	BYA10D5	CCD-502	B-250	5HK-D50
C87	22 NPO	(20) †	NPO-SI 20	D6-220	LA10Q22	CCD-220	GP422	10TS-Q22
C88	390 5%		1469-00039		22R5T39	CM-19B-391J		
C89	390 5%		1469-00039		22R5T39	CM-19B-391J		
C90	.0015		BPD-0015	DD-152	LA10D15-C4	CCD-152	B-215	10TS-D15
C91	.0015		BPD-0015	DD-152	LA10D15-C4	CCD-152	B-215	10TS-D15
C92	470 5%		1469-00047		22R5T47	CM-19B-471J		
C93	470 5%		1469-00047		22R5T47	CM-19B-471J		
C94	5-20							
C95	10-100							
C96	.005		BPD-005	DD-502	BYA10D5	CCD-502	B-250	5HK-D50
C97	2.2 NPO		NPO-SI 2.2	TCZ-2R2	C10V22C	CCTO-2R2	CNO-522	10TCC-V22
C98	4-20							
C99	.005		BPD-005	DD-502	BYA10D5	CCD-502	B-250	5HK-D50
C100	.005		BPD-005	DD-502	BYA10D5	CCD-502	B-250	5HK-D50
C101	.056 1600V							
C102	.05		BPD-05	DD-503	CUB2S5	1DP-2-503	BT-150	5HK-S50
C103	.01		BPD-01	DD-103	BYA10S1	CCD-103	B-110	5HK-S10
C104	.01		BPD-01	DD-103	BYA10S1	CCD-103	B-110	5HK-S10
C105	.05		BPD-05	DD-503	CUB6S5	6DP-3-503	GP150	6PS-S50
C106	1.0 100V		P288N-1.		CUB2W1		GEM-21	2TM-M1
C107	.05		BPD-05	DD-503	CUB6S5	6DP-3-503	GP150	6PS-S50
C108	.001		BPD-001	DD-102	BYA10D1	CCD-102	B-210	5HK-D10
C109	.001		BPD-001	DD-102	BYA10D1	CCD-102	B-210	5HK-D10
C110	.001		BPD-001	DD-102	BYA10D1	CCD-102	B-210	5HK-D10
C111	2.2		NPO-SI 2.2	TCZ-2R2	C10V22C	CCTO-2R2	CNO-522	10TCC-V22

† Alternate Value.

CONTROLS

All wattages 1/2 watt, or less, unless otherwise listed.

ITEM No.	USE	RESISTANCE	REPLACEMENT DATA				
			REGENCY PART No.	CENTRALAB PART No.	CLAROSTAT PART No.	CTS-IRC PART No.	MALLORY PART No.
R1	Volume	500K	101-734-2	F2-500K, SU204 or (B-60)	A47-500K-Z, KSS-3	B13-133, SK2 or (BU1, CF25, SS2, DC1)*	UA55A, SK1000 or (RU55A, SL38, SK1000) or (U48)
R2	ANL & ANL On-Off	250K	100-093-11	F2-250K, SU500, KR-2 or (AB-51, AK-11, KR-2)	A47-250K-Z, KSS-5, SWE-20	Q13-130, AQ5, 76-2 or(BU2, CF23, SS12, WF)*	UA254A, SL3500, EC240①, US-42 or (RU254A, SL38, SL3500, EC240①, US-42) or (U44, DS-36, US-27)
R3	Squelch	5000Ω	101-734	F5-5000, SU204, or B-12)		B17-114, SK2	UA53L, SK1000 or (RU53L, SL38, SK1000) or (U14)
R4	Modulation Level	1meg	301-094-1	TT-70 or (F2-1meg, SN010, AK-38)	B47-1meg-Z	B13-137, TM4 or (BU11, CF26, SS6)*	TA16A or (RU16A, SL37, SN1000)
R5	"S" Meter Zero Adj.	10K	301-094-2	TT-14 or (F1-10K, SN010, AK-38)	B47-10K-S	B11-116, TM4 or (BU11, CF9, SS6)*	TA14L, or (RU14L, SL37, SN1000)
R6	RF Monitor Zero Adj.	10K	301-094-2	TT-14 or (F1-10K, SN010, AK-38)	B47-10K-S	B11-116, TM4 or (BU11, CF9, SS6)*	TA14L, or (RU14L, SL37, SN1000)

* "SNAPTROL"
① Use Coupler with portion of original shaft to obtain desired length.

RESISTORS (Power and Special)

ITEM No.	RATING	REPLACEMENT DATA		
		IRC PART No.	WORKMAN PART No.	REMARKS
R54	300Ω 5W	PW5-300	5W-SQ-300	
R57	2Ω 5W	PW5-2	5W-SQ-2	
R58	12Ω 5W	PW5-12	5W-SQ-12	
R59	12Ω 5W	PW5-12	5W-SQ-12	

ITEM No.	RATING	REPLACEMENT DATA		
		IRC PART No.	WORKMAN PART No.	REMARKS
R92	5000Ω 10W	PW10-5000	10W-SQ-5000	
R93	1300Ω 5W	PW5-1300	5W-SQ-1300	
R96	22Ω 10W	PW10-22	10W-SQ-22	

PARTS LIST AND DESCRIPTION (CONTINUED)

COILS (RF-IF)

ITEM No.	USE	REPLACEMENT DATA					NOTES
		REGENCY PART No.	MERIT PART No.	MILLER PART No.	STANCOR PART No.	WORKMAN PART No.	
L1	Antenna Load(1.3uh)						
L2	Antenna						
L3	RF Interstage						
L4	3rd Trans. Osc.						
L5	Trans. Osc. Coup.						
L6	7.5MC IF						
L7	2nd Mixer Grid						
L8	3rd Rec. Osc.						
L9	1st 260KC IF						
L10	2nd 260KC IF						
L11	3rd 260KC IF						
L12	1st Rec.-Trans. Osc.						
L13	2nd Rec.-Trans. Osc.						
L14	Osc. Coupling						
L15	Final RF Coup.						
L16	RF Choke						
L17	RF Choke						
L18	RF Choke						
L19	RF Choke						
L20	RF Output Coup.						
L21	RF Output Coup.						
L22	RF Choke						
L23	Hash Suppressor						

TRANSFORMER (POWER)

ITEM No.	RATING			REPLACEMENT DATA					NOTES
	PRI.	SEC. 1	SEC. 2	REGENCY PART No.	MERIT PART No.	STANCOR PART No.	THORDARSON PART No.	TRIAD PART No.	
T1	117VAC @ .750A (or)12.6V DC @ 7A	150VAC @ .12A DC	12.6V @ 5A						

TRANSFORMER (AUDIO OUTPUT)

ITEM No.	IMPEDANCE		REPLACEMENT DATA					NOTES
	PRI.	SEC. 1	REGENCY PART No.	MERIT PART No.	STANCOR PART No.	THORDARSON PART No.	TRIAD PART No.	
T2	5000ΩCT	3-4Ω						
		SEC. 2						
		500Ω DC Res.						

SPEAKER

ITEM No.	TYPE	REPLACEMENT DATA		NOTES
		REGENCY PART No.	QUAM PART No.	
SP1	3" x 5" PM 3-4Ω		35A05	

VIBRATOR

ITEM No.	TYPE	INPUT VOLTS	FRE-QUENCY	REPLACEMENT DATA			NOTES
				REGENCY PART No.	CORNELL-DUBILIER PART No.	MALLORY PART No.	
M1	Interrupter	12.6V	115~		6301	G-1501	

FUSES

ITEM No.	TYPE	RATING	REPLACEMENT DATA					
			REGENCY PART No.		LITTELFUSE PART No.		BUSS PART No.	
			FUSE	HOLDER	FUSE	HOLDER	FUSE	HOLDER
M2	3AG	1½A 250V 10A 32V	①		31201.5 (3AG 1½A 250V)	342001	AGC 1½	HKP

① DC Operation only.

MISCELLANEOUS

ITEM No.	PART NAME	REGENCY PART No.	NOTES
M3	Crystal		7.500MC (Transmit)
M4	Crystal		7.500MC (Receive)
M5	Crystal		10.850MC (Channels 1 thru 4)
M6	Crystal		10.900MC (Channels 5 thru 8)
M7	Crystal		10.950MC (Channels 9 thru 12)
M8	Crystal		11.000MC (Channels 13 thru 16)
M9	Crystal		11.050MC (Channels 17 thru 20)
M10	Crystal		11.100MC (Channels 21 thru 23)
M11	Crystal		8.615MC (Channels 1, 5, 9, 13, 17, 21)
M12	Crystal		8.625MC (Channels 2, 6, 10, 14, 18, 22)
M13	Crystal		8.635MC (Channels 3, 7, 11, 15, 19)
M14	Crystal		8.655MC (Channels 4, 8, 12, 16, 20, 23)
M15	Switch		Crystal Selector
M16	Switch		Meter Mode Selector (S-V-C)
M17	Switch		Power Off-On
M18	Relay		Receive-Transmit
M19	Microphone Ass'y.		Includes Push-to-talk Switch
M20	Rectifier (1N34)		(Meter)
M21	S Meter		